ECO#	REV:	DESCRIPTION	REV. BY:	DATE
6733	A00	RELEASE TO PRODUCTION	KR	2-24-04
6899	A01	UPDATED EPROM		4-1-04
7129	A02	CHANGED CAPS	TH	6/1/04

MIC/LINE in 1-8

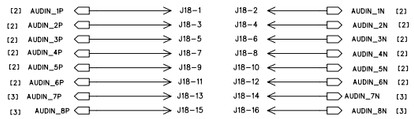

AUX+MISC IO

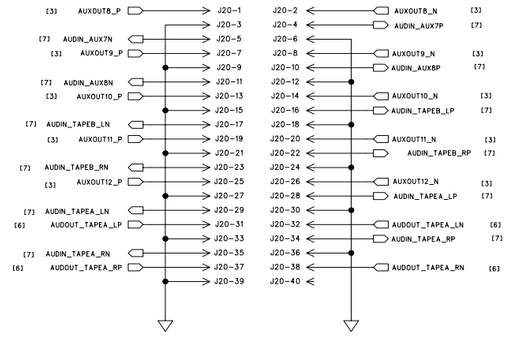

UTILITY HEADER

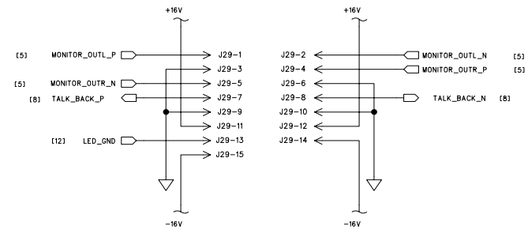

MIC/LINE in 9-16

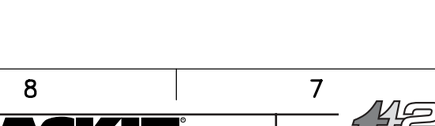

AUX IO

MIC/LINE in 17-24

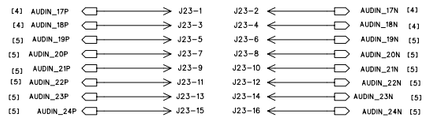

MAIN OUTS1-8 and LRC

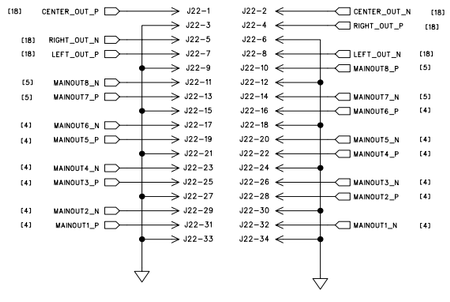

Z100 0006767-00 PCB FAB DMR Codec

©2004 MACKIE DESIGNS INC.
ALL RIGHTS RESERVED
THE INFORMATION CONTAINED HEREIN
IS PROPRIETARY AND CONFIDENTIAL
PROPERTY OF MACKIE DESIGNS INC.

APPROVALS	DATE
DRAWN: akappers	2003.11.26
CHECKED:	
NP ENG:	
MATERIAL:	
MFG:	
MFG ENG:	
ISSUED:	

MACKIE.
Mackie Designs Inc. Woodinville, Wa.

TT24 CODEC BOARD
Analog connectors

SIZE	SCALE:	DWG. NO.	REV.
D	NONE	SCH0006768	A02

DWG FILE: SHEET 1 OF 18

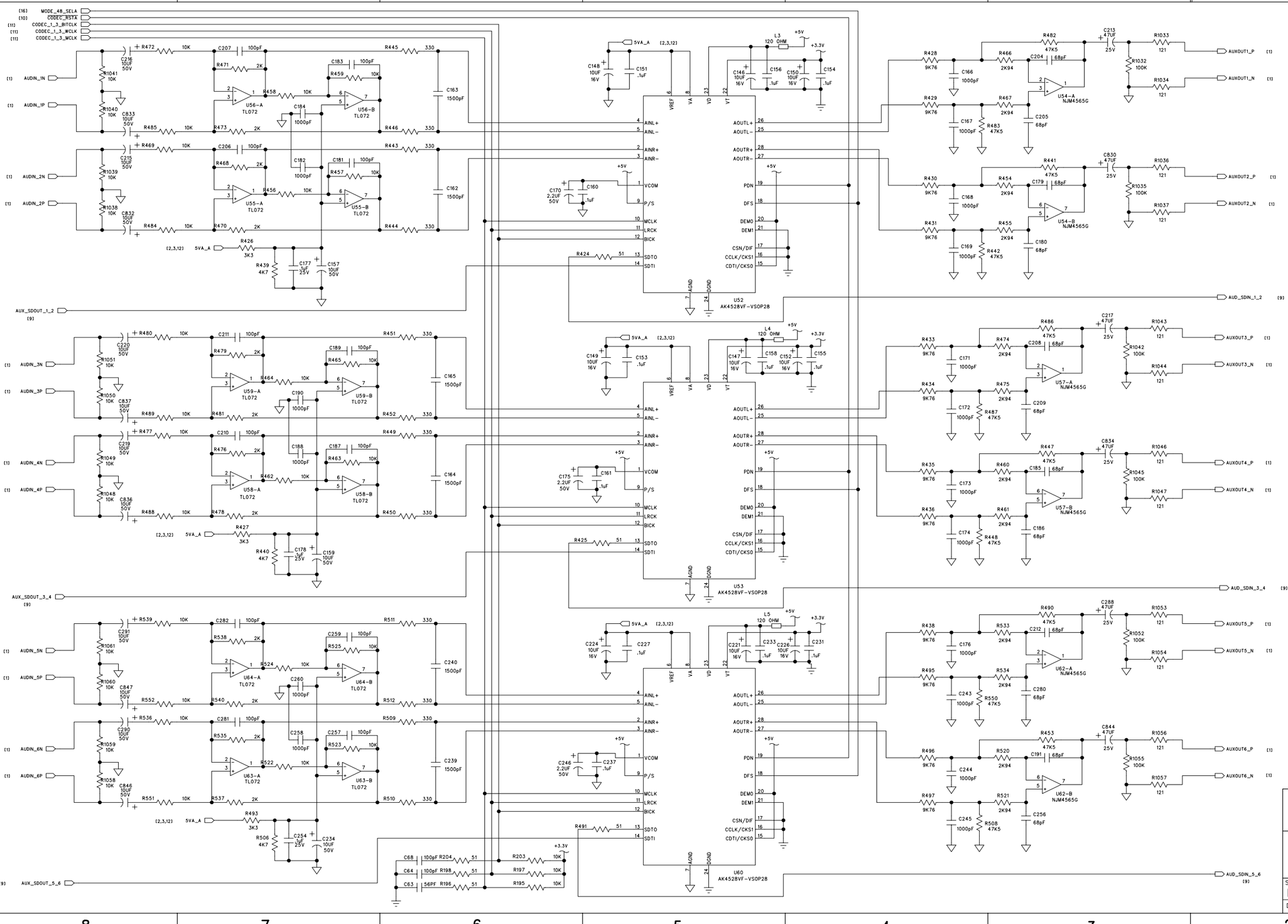

MACKIE.
Mackie Designs Inc. Woodinville, Wa.

TT24 CODEC BOARD
CODECs 1-3

SIZE	SCALE:	DWG. NO.	REV.
D	NONE	SCH0006768	A02
DWG FILE:		SHEET 2 OF 18	

©2004 LOUD Technologies Inc. All rights reserved

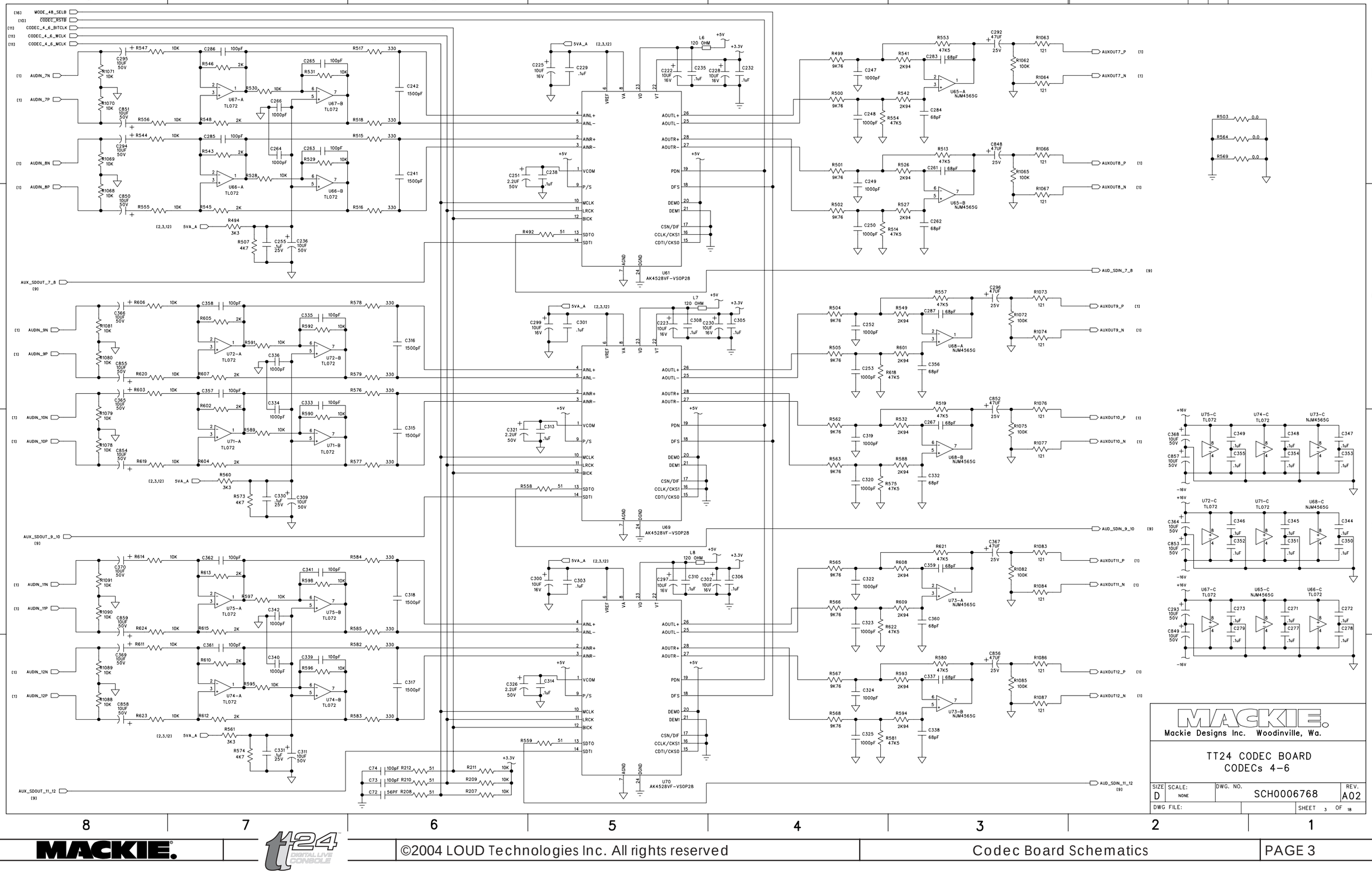

MACKIE.

Mackie Designs Inc. Woodinville, Wa.

TT24 CODEC BOARD
CODECs 4-6

SIZE	SCALE:	DWG. NO.	REV.
D	NONE	SCH0006768	A02
DWG FILE:		SHEET 3 OF 18	

©2004 LOUD Technologies Inc. All rights reserved

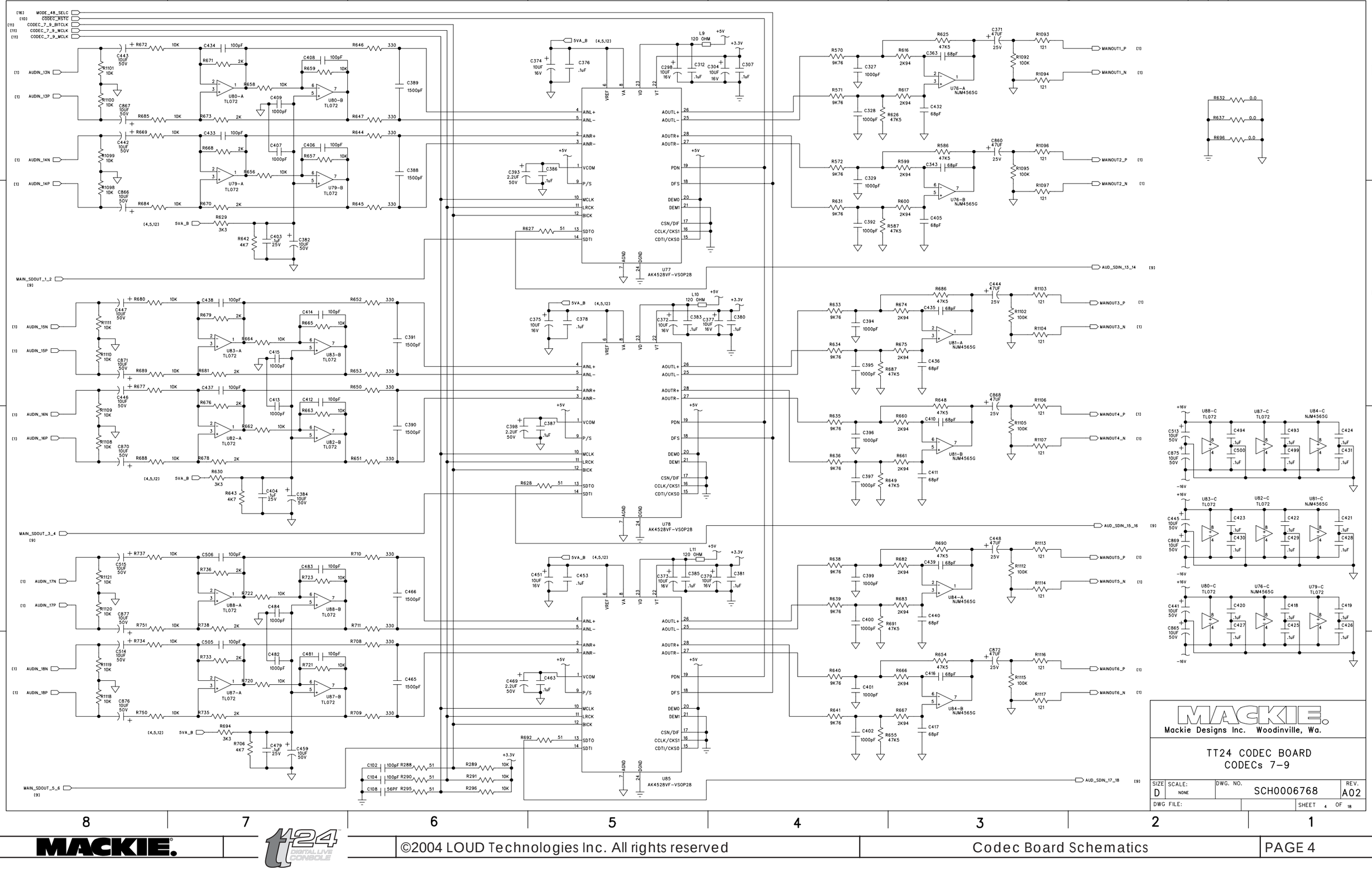

©2004 LOUD Technologies Inc. All rights reserved

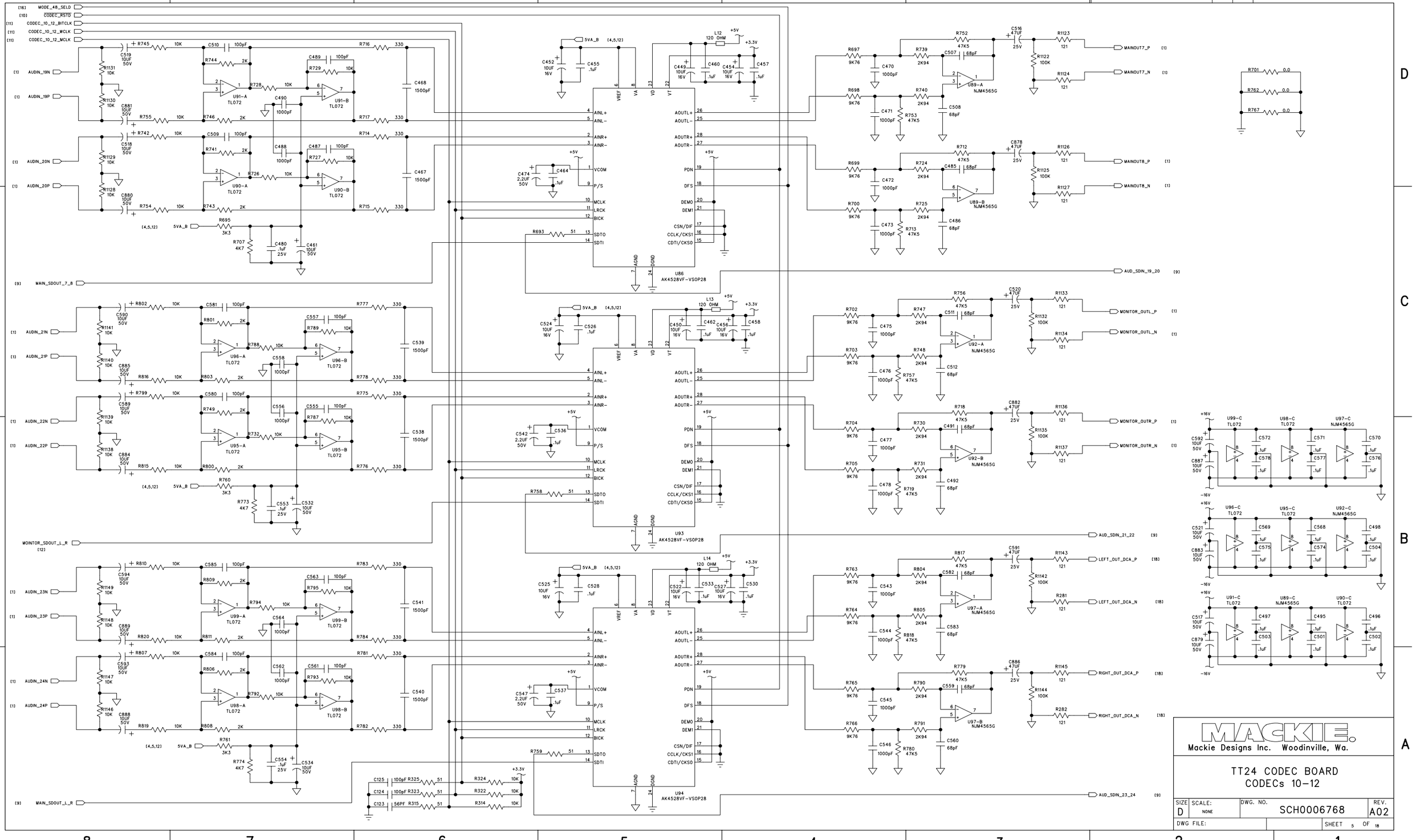

MACKIE.
Mackie Designs Inc. Woodinville, Wa.

TT24 CODEC BOARD
CODECs 10-12

SIZE	SCALE:	DWG. NO.	REV.
D	NONE	SCH0006768	A02
DWG FILE:		SHEET 5 OF 18	

©2004 LOUD Technologies Inc. All rights reserved

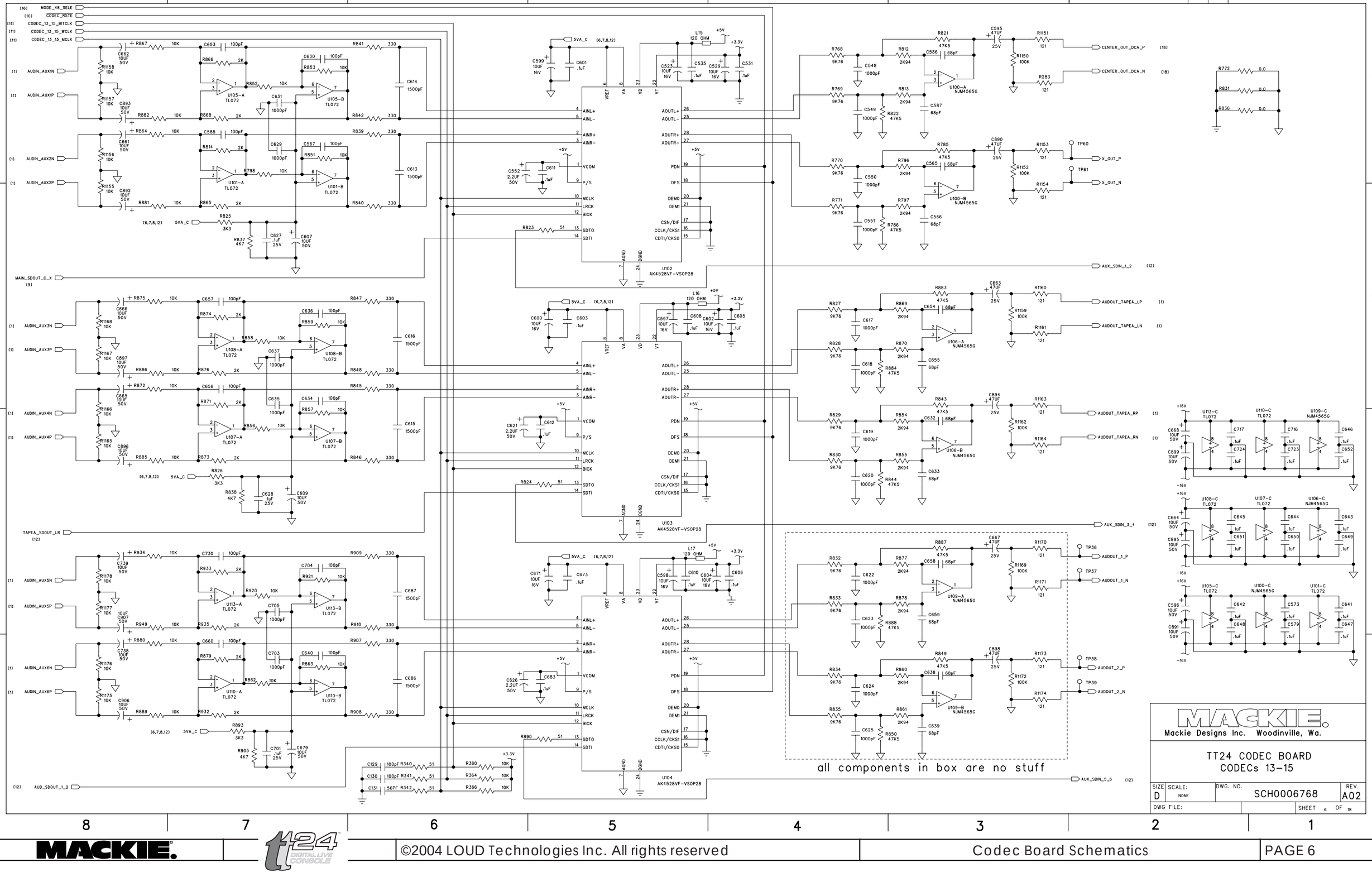

MACKIE.

Mackie Designs Inc. Woodinville, Wa.

TT24 CODEC BOARD
CODECs 13-15

SIZE	SCALE:	DWG. NO.	REV.
D	NONE	SCH0006768	A02
DWG FILE:		SHEET 6 OF 18	

©2004 LOUD Technologies Inc. All rights reserved

all components in box are no stuff

MODE_48_SELF
CODEC_RSTF
CODEC_16_18_BITCLK
CODEC_16_18_WCLK
CODEC_16_18_MCLK

AUDIN_AUX7N
AUDIN_AUX7P
AUDIN_AUX8N
AUDIN_AUX8P
AUD_SDOUT_3_4

AUDIN_TAPEA_LN
AUDIN_TAPEA_LP
AUDIN_TAPEA_RN
AUDIN_TAPEA_RP
AUD_SDOUT_5_6

AUDIN_TAPEB_LN
AUDIN_TAPEB_LP
AUDIN_TAPEB_RN
AUDIN_TAPEB_RP
AUD_SDOUT_7_8

U111 AK4528VF-VSOP28
U112 AK4528VF-VSOP28
U119 AK4528VF-VSOP28

AUX_SDIN_7_8
TAPEA_SDIN_L_R
TAPEB_SDIN_L_R

AUDOUT_3_P
AUDOUT_3_N
AUDOUT_4_P
AUDOUT_4_N
AUDOUT_5_P
AUDOUT_5_N
AUDOUT_6_P
AUDOUT_6_N
AUDOUT_7_P
AUDOUT_7_N
AUDOUT_8_P
AUDOUT_8_N

MACKIE.
Mackie Designs Inc. Woodinville, Wa.

TT24 CODEC BOARD
CODECs 16-18

SIZE	SCALE:	DWG. NO.	REV.
D	NONE	SCH0006768	A02
DWG FILE:		SHEET 7 OF 18	

©2004 LOUD Technologies Inc. All rights reserved

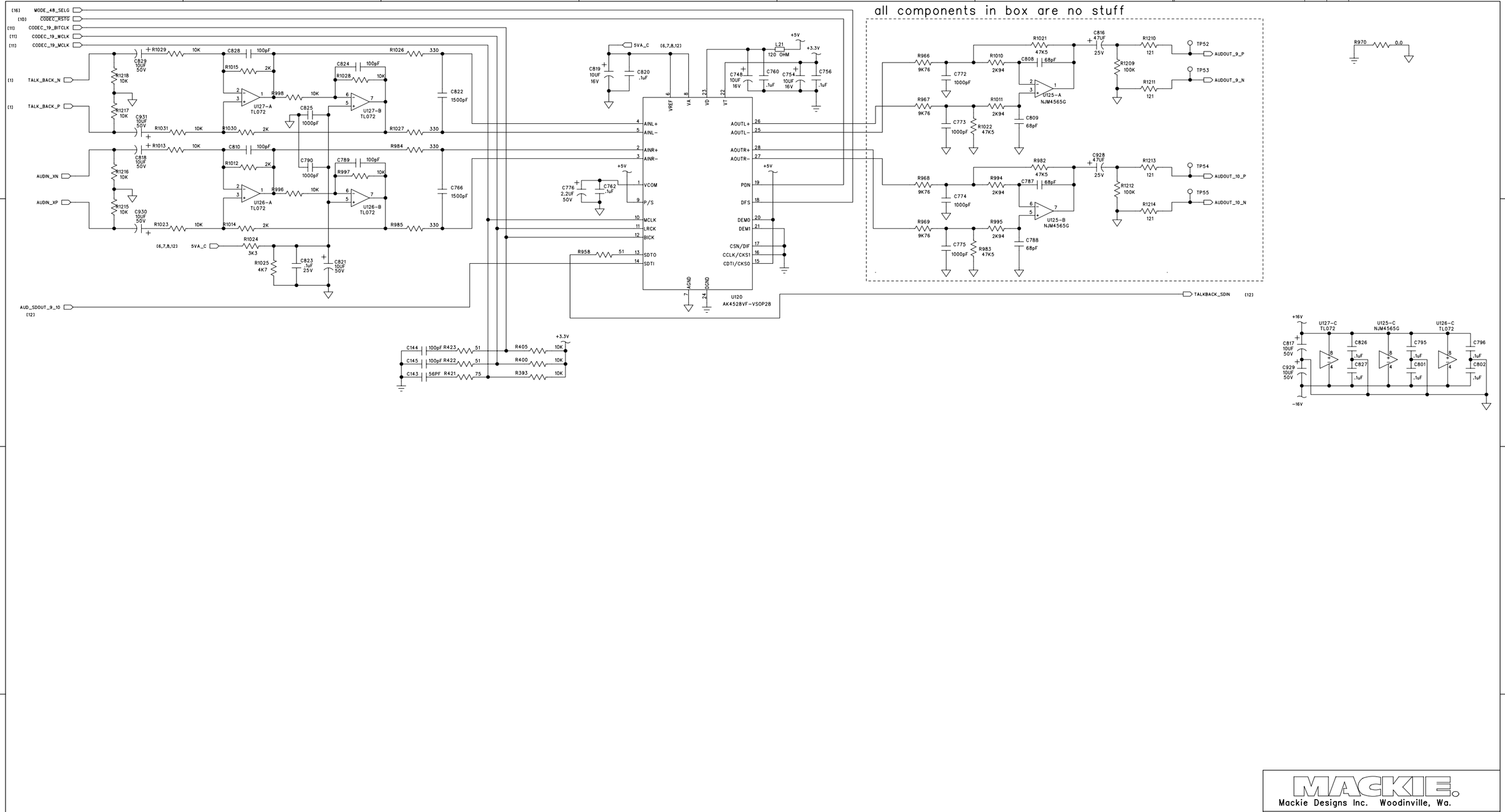

8	7	6	5	4	3	2	1

Mackie Designs Inc. Woodinville, Wa.

TT24 CODEC BOARD
CODEC 19 and DCA

SIZE	SCALE:	DWG. NO.	REV.
D	NONE	SCH0006768	A02
DWG FILE:		SHEET 8 OF 18	

©2004 LOUD Technologies Inc. All rights reserved

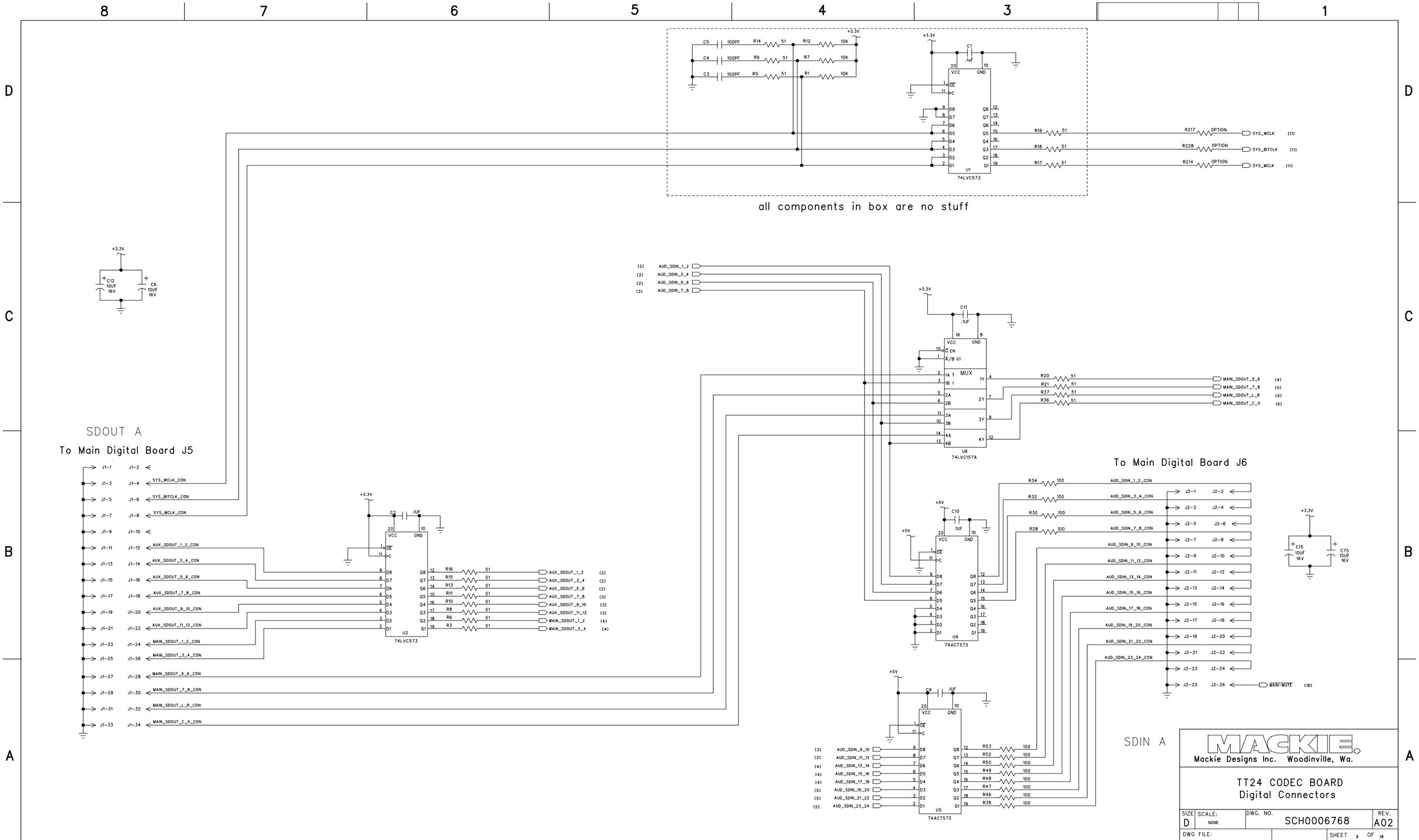

©2004 LOUD Technologies Inc. All rights reserved

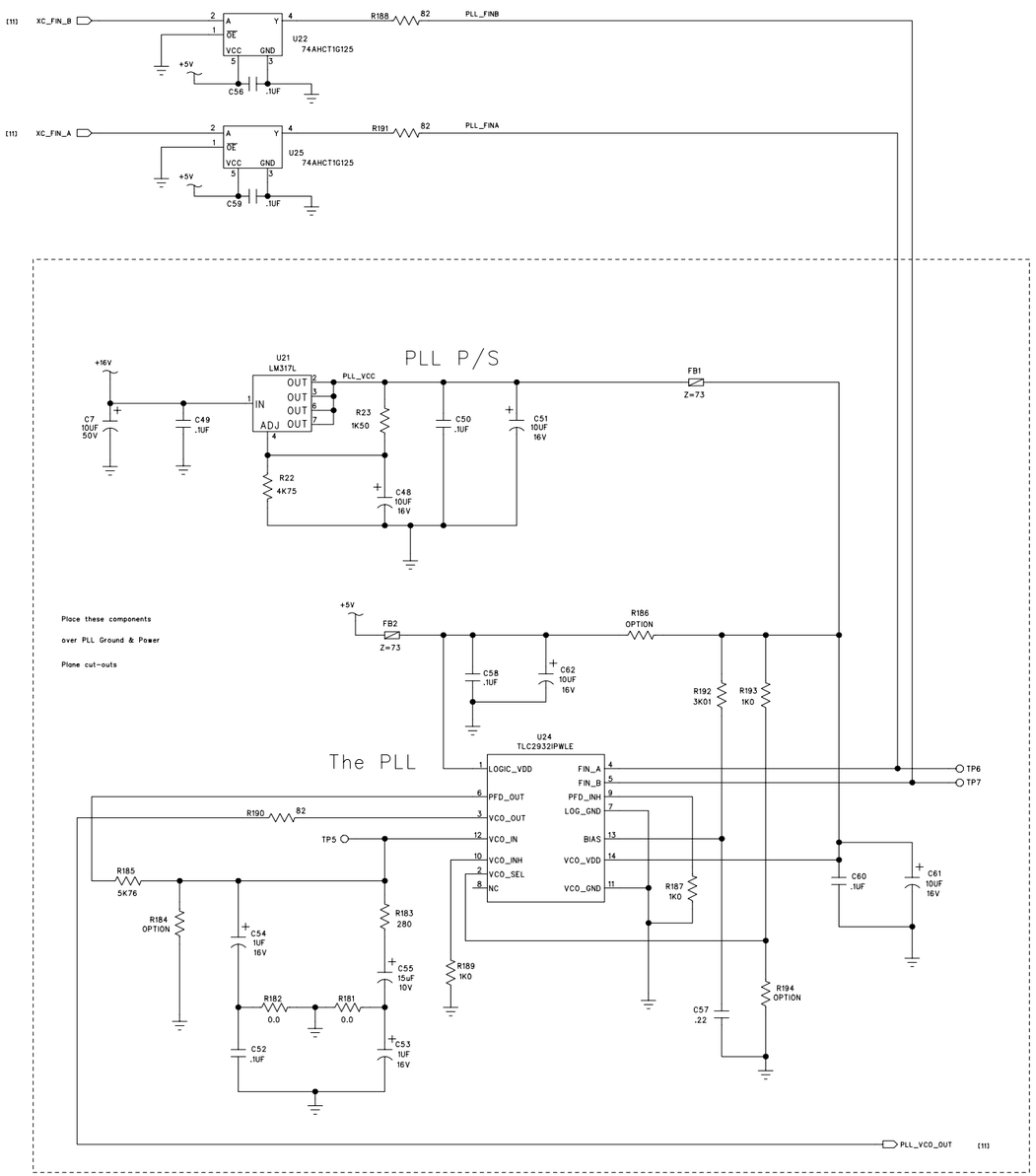

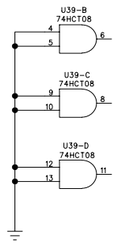

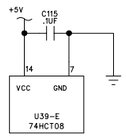

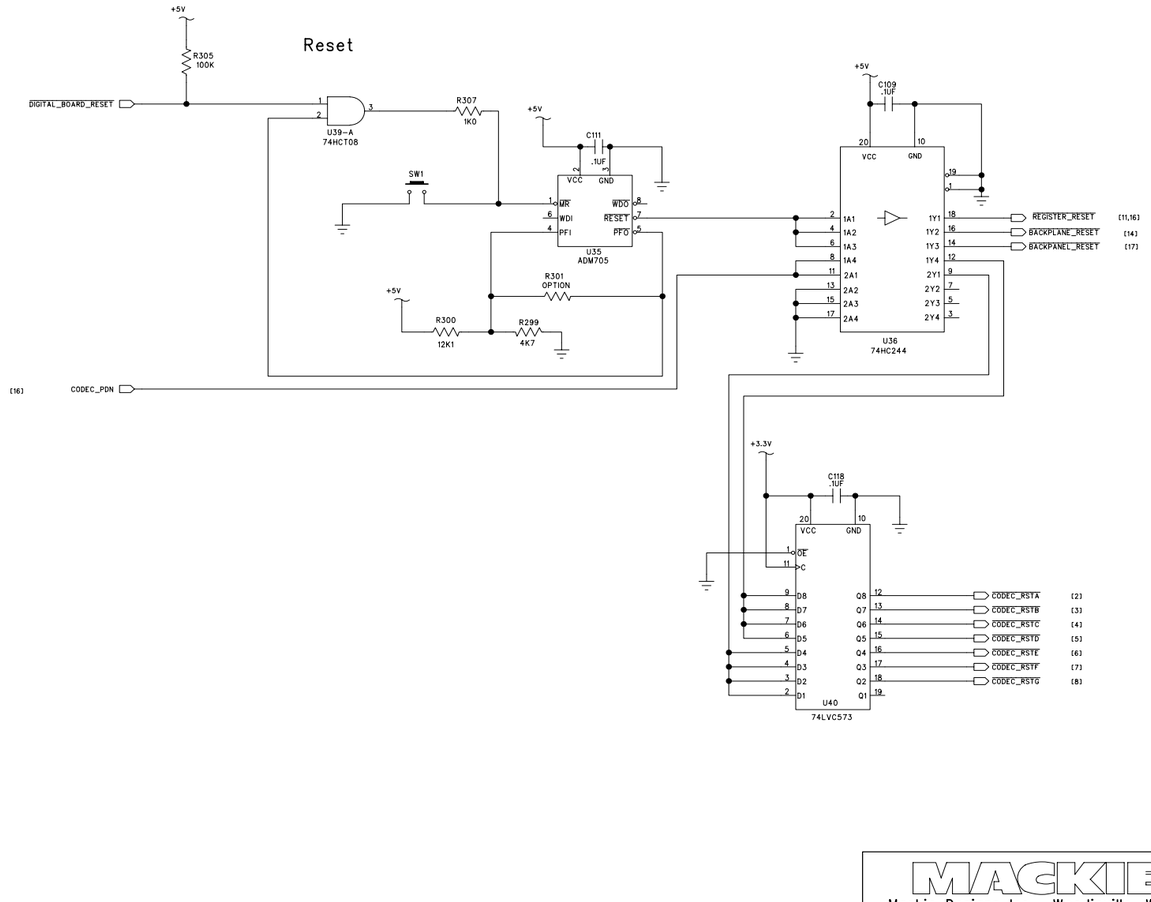

MACKIE.
Mackie Designs Inc. Woodinville, Wa.

TT24 CODEC BOARD
PLL and Reset

SIZE	SCALE:	DWG. NO.	REV.
D	NONE	SCH0006768	A02
DWG FILE:		SHEET 10 OF 18	

©2004 LOUD Technologies Inc. All rights reserved

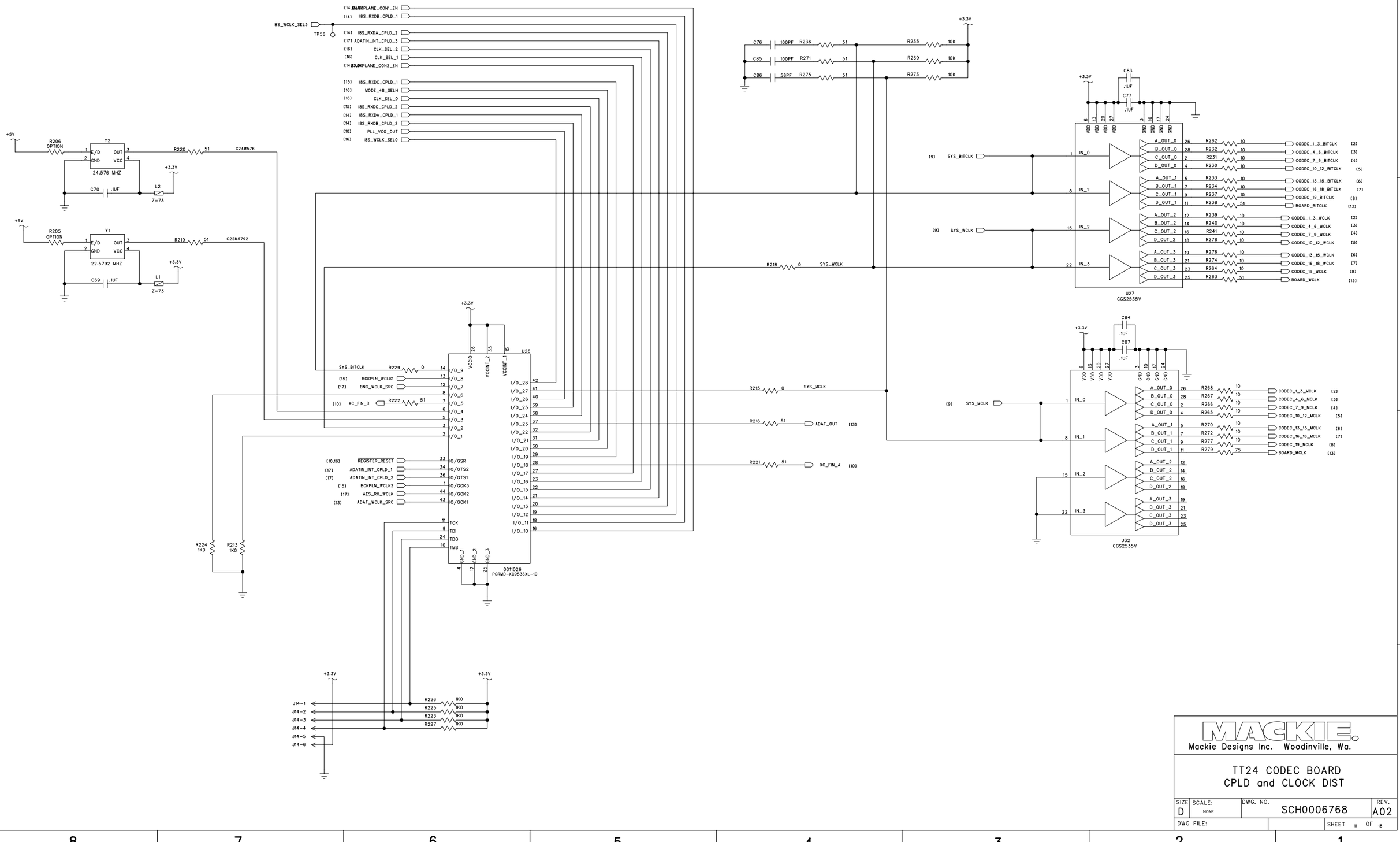

Mackie Designs Inc. Woodinville, Wa.

TT24 CODEC BOARD
CPLD and CLOCK DIST

SIZE	SCALE:	DWG. NO.	REV.
D	NONE	SCH0006768	A02
DWG FILE:		SHEET 11 OF 18	

©2004 LOUD Technologies Inc. All rights reserved

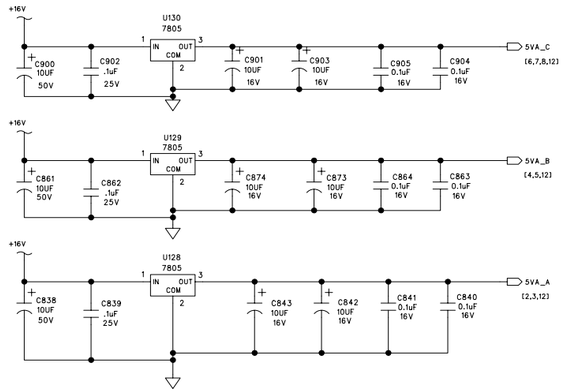

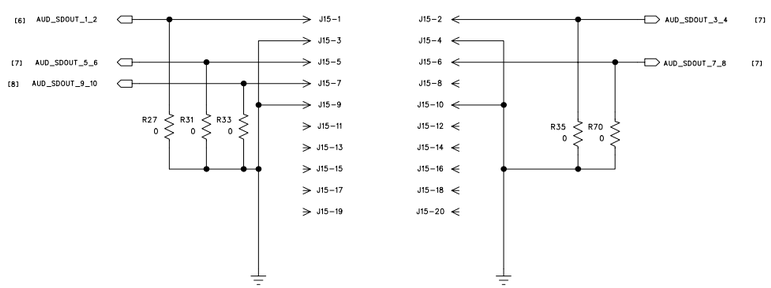

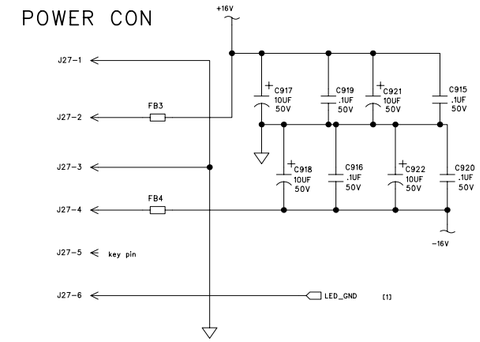

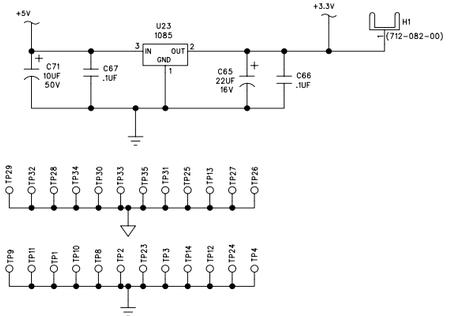

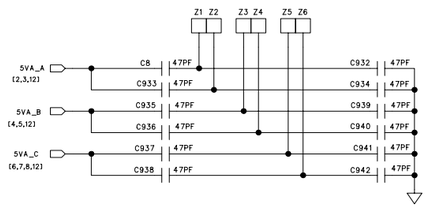

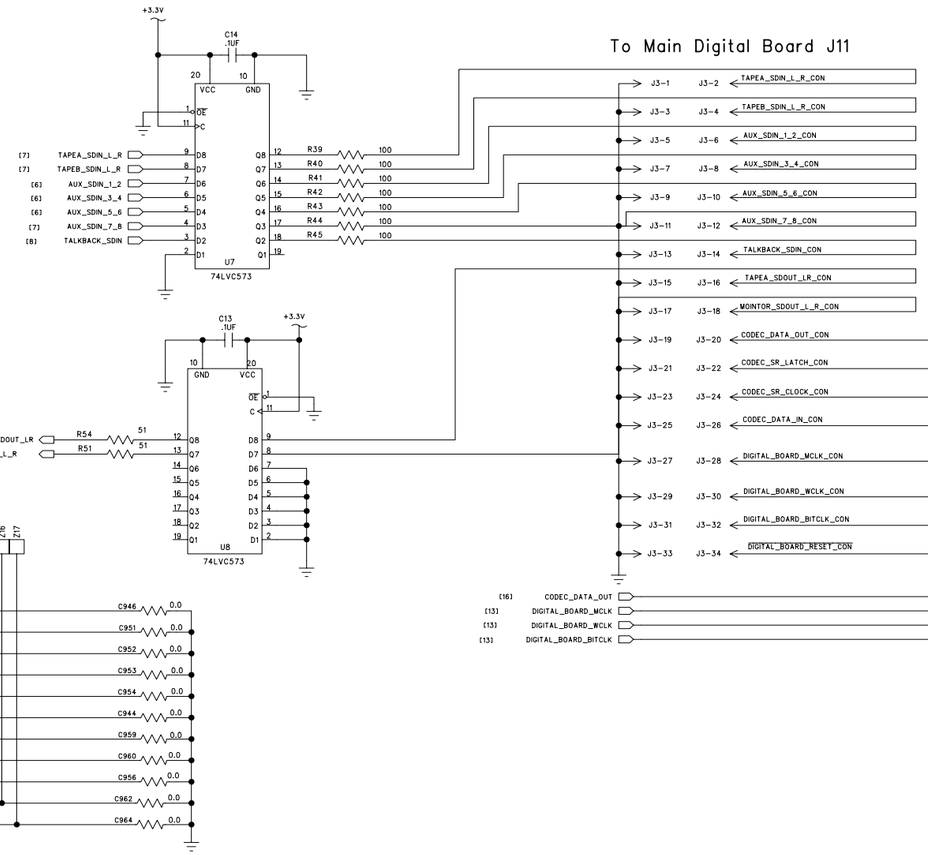

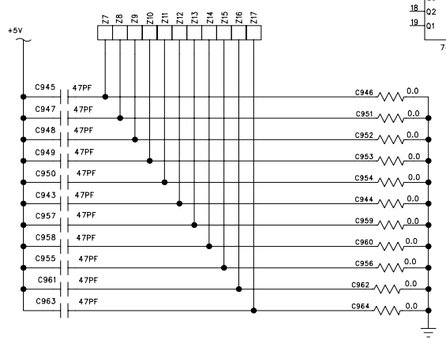

MACKIE.
Mackie Designs Inc. Woodinville, Wa.

TT24 CODEC BOARD
STRIFE

SIZE	SCALE:	DWG. NO.	REV.
D	NONE	SCH0006768	A02
DWG FILE:		SHEET 12 OF 18	

©2004 LOUD Technologies Inc. All rights reserved

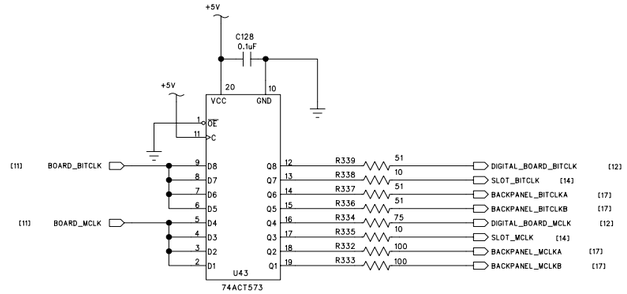

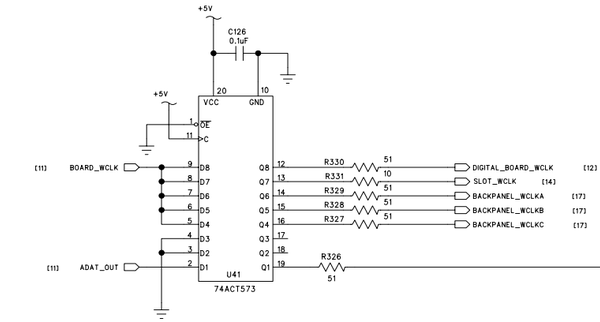

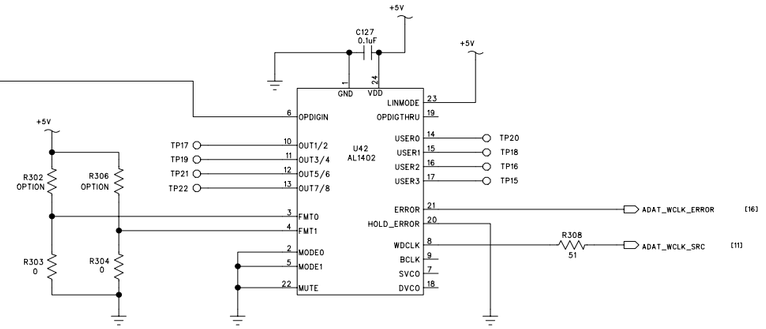

MACKIE.
Mackie Designs Inc. Woodinville, Wa.

TT24 CODEC BOARD
ADAT and Off board clk Dist

SIZE	SCALE:	DWG. NO.	REV.
D	NONE	SCH0006768	A02
DWG FILE:		SHEET 13 OF 18	

©2004 LOUD Technologies Inc. All rights reserved

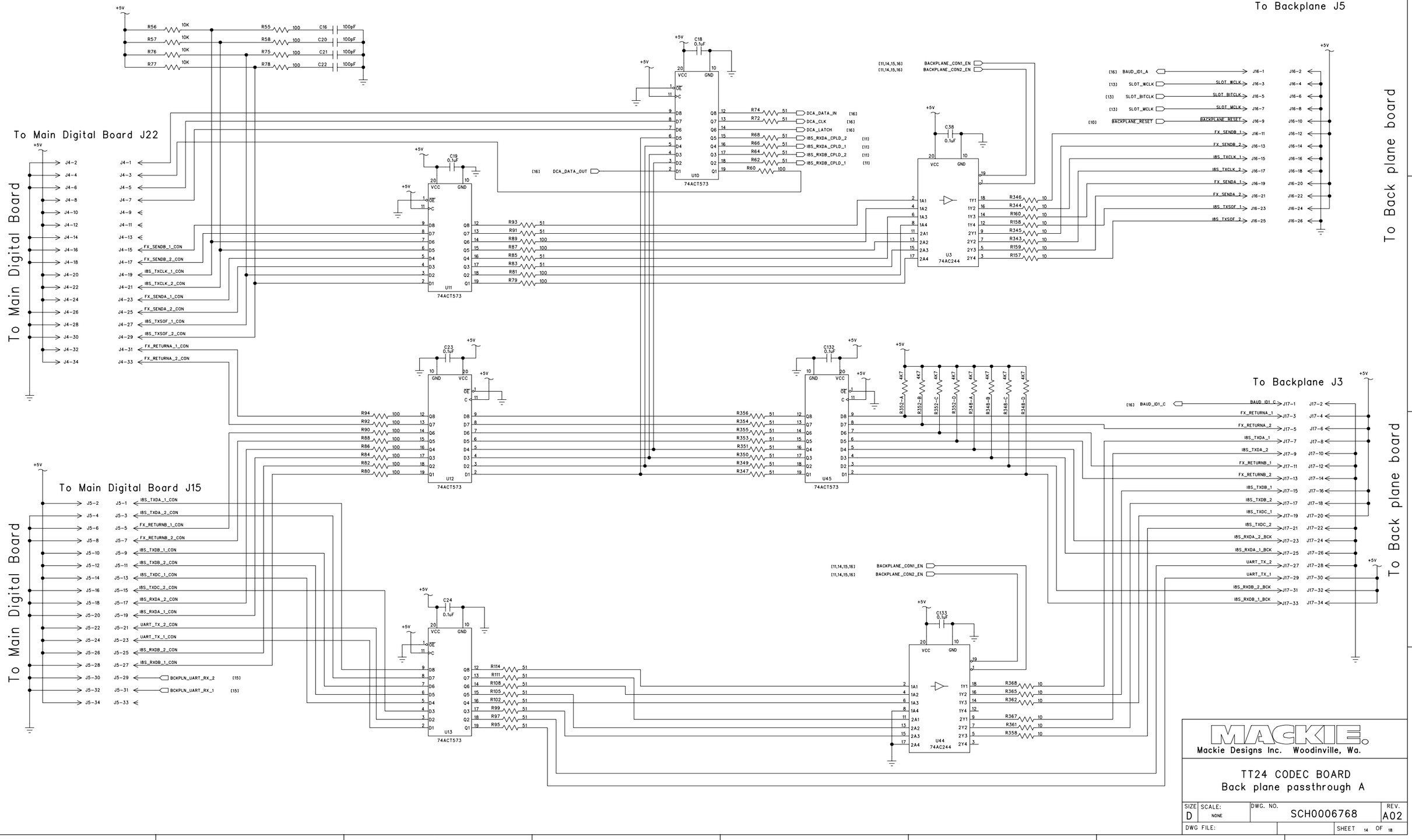

Mackie Designs Inc. Woodinville, Wa.

TT24 CODEC BOARD
Back plane passthrough A

SIZE	SCALE:	DWG. NO.	REV.
D	NONE	SCH0006768	A02
DWG FILE:		SHEET 14 OF 18	

©2004 LOUD Technologies Inc. All rights reserved

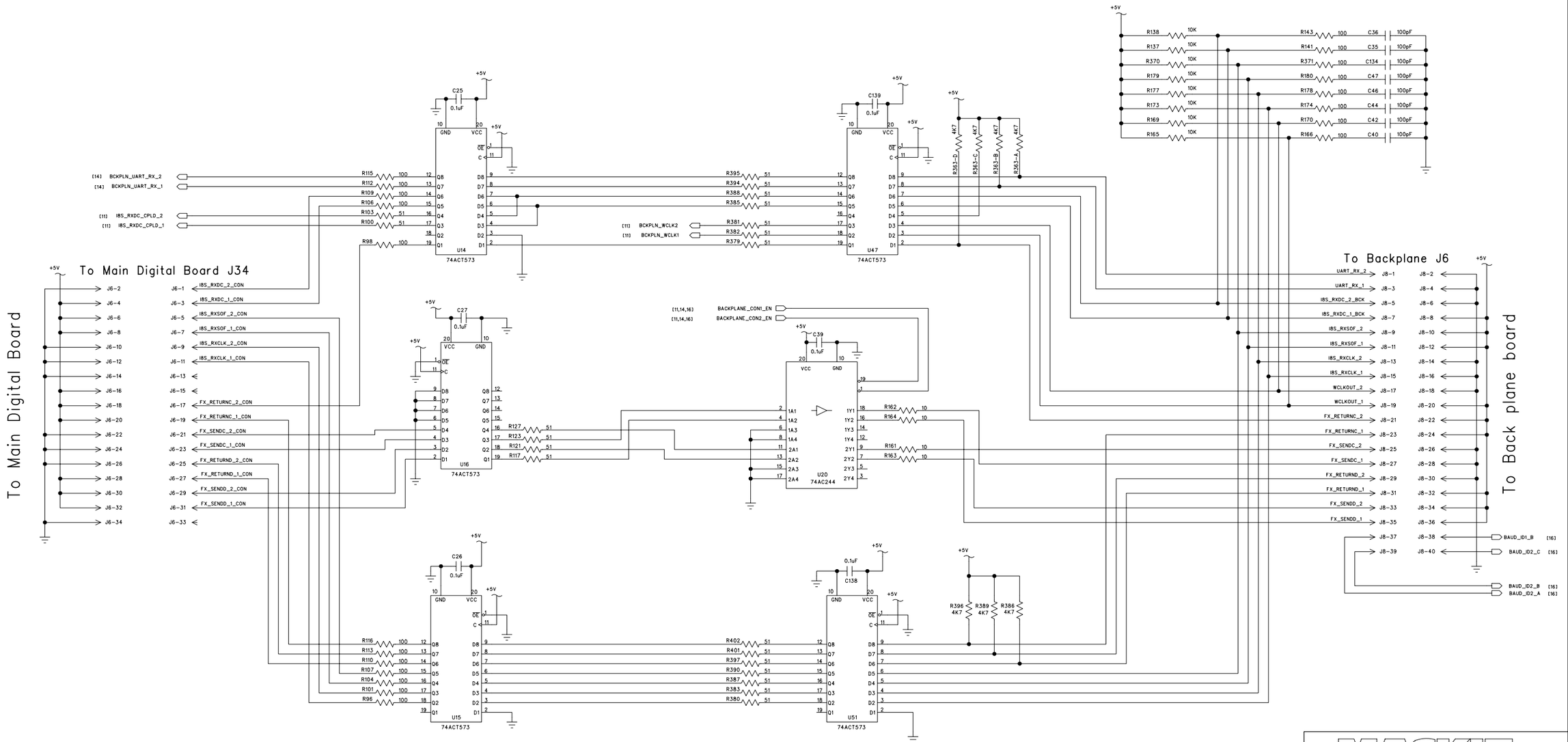

MACKIE.
Mackie Designs Inc. Woodinville, Wa.

TT24 CODEC BOARD
Back plane passthrough B

SIZE	SCALE:	DWG. NO.	REV.
D	NONE	SCH0006768	A02
DWG FILE:		SHEET 15 OF 18	

©2004 LOUD Technologies Inc. All rights reserved

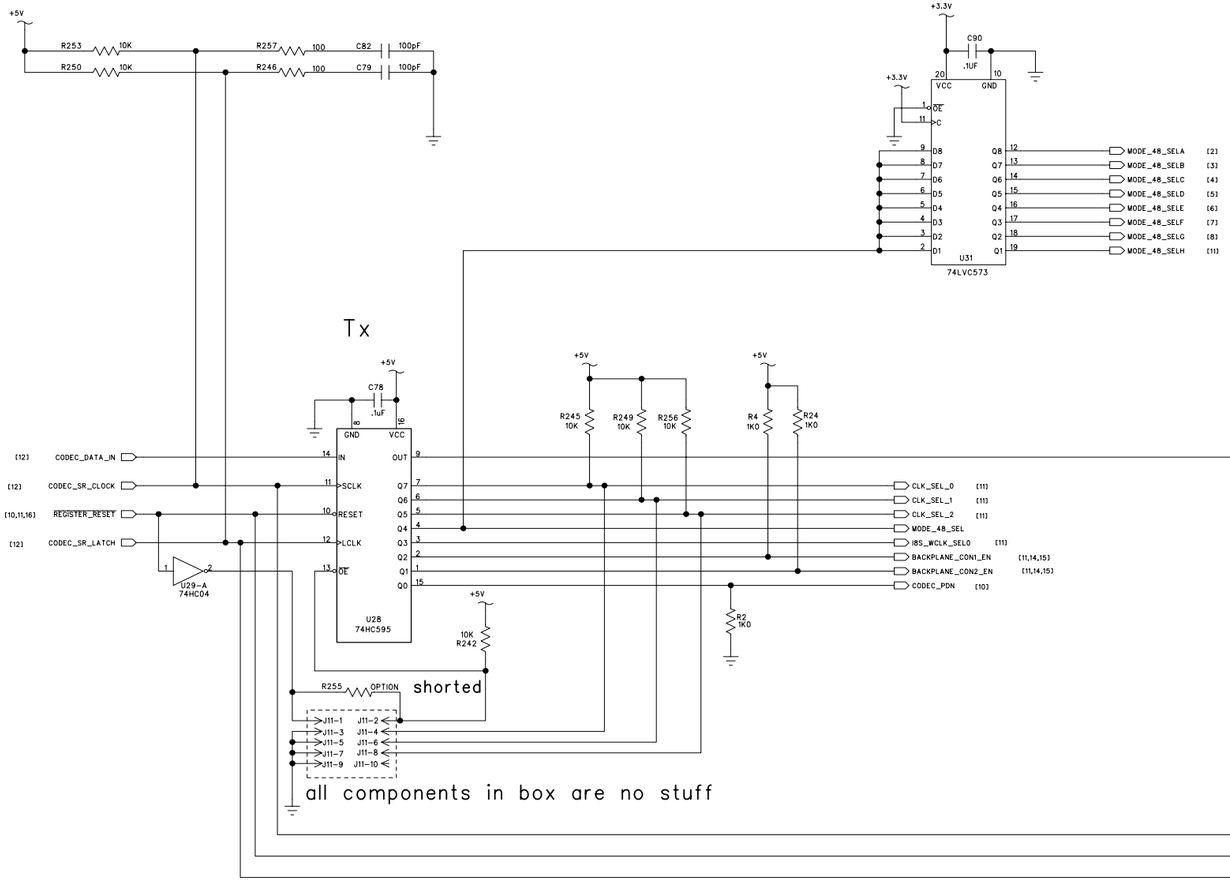

MACKIE.

Mackie Designs Inc. Woodinville, Wa.

TT24 CODEC BOARD
REGISTERS

SIZE	SCALE:	DWG. NO.	REV.
D	NONE	SCH0006768	A02
DWG FILE:		SHEET 16 OF 18	

©2004 LOUD Technologies Inc. All rights reserved

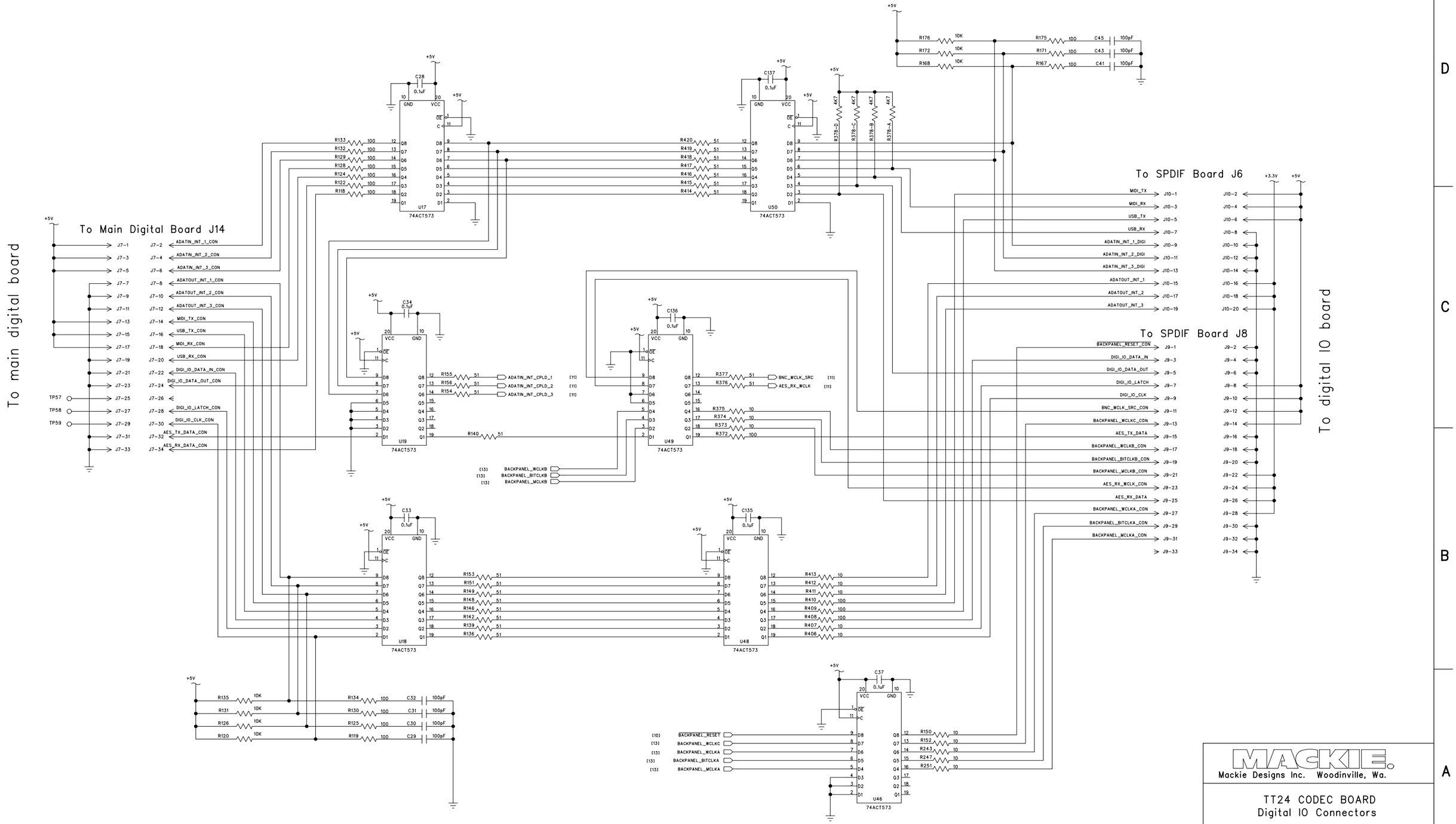

Mackie Designs Inc. Woodinville, Wa.

TT24 CODEC BOARD
Digital IO Connectors

SIZE	SCALE:	DWG. NO.	REV.
D	NONE	SCH0006768	A02
DWG FILE:		SHEET 17 OF 18	

©2004 LOUD Technologies Inc. All rights reserved

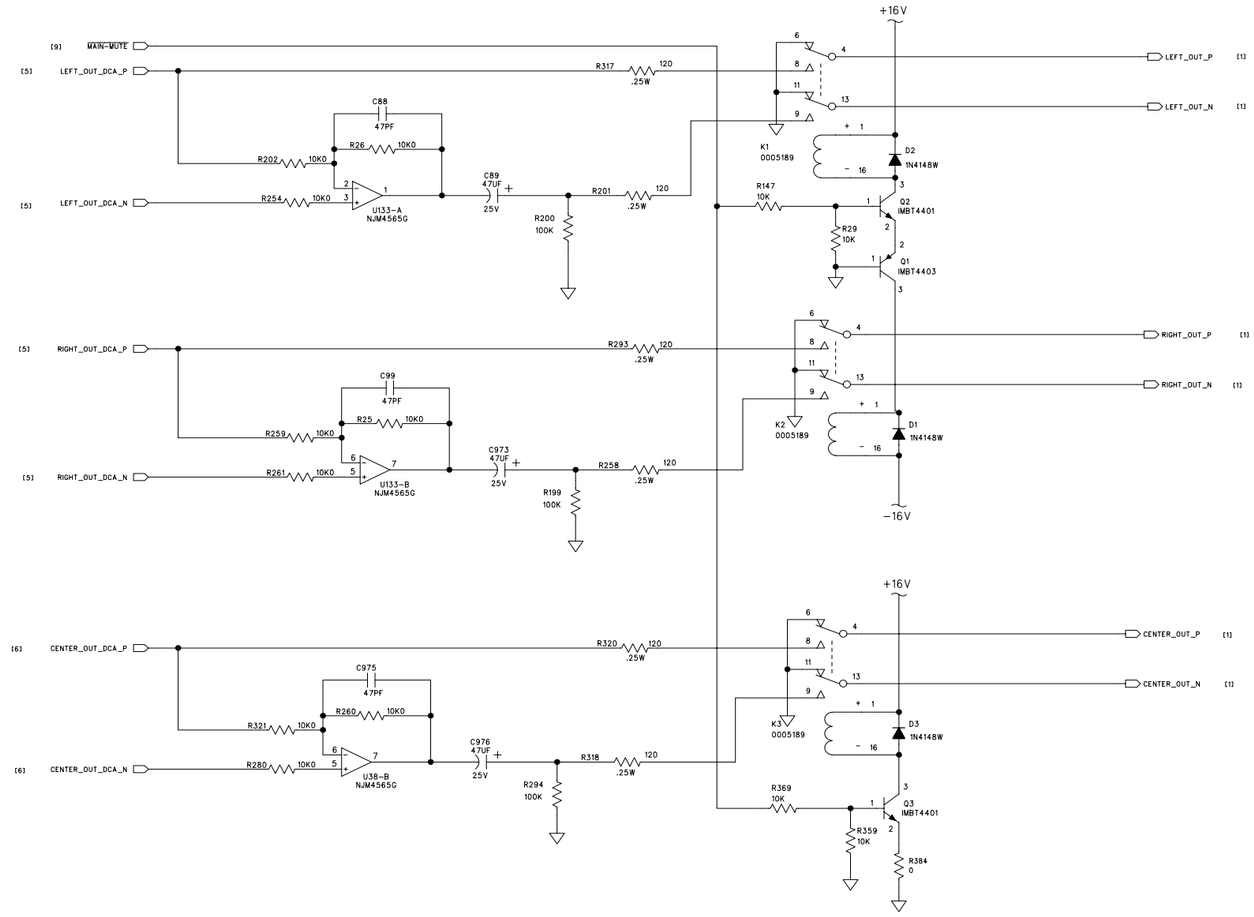

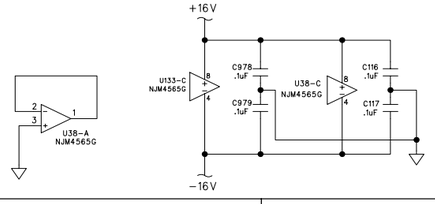

MACKIE.
Mackie Designs Inc. Woodinville, Wa.

TT24 CODEC BOARD
RELAYS

SIZE	SCALE:	DWG. NO.	REV.
D	NONE	SCH0006768	A02
DWG FILE:		SHEET 18 OF 18	

©2004 LOUD Technologies Inc. All rights reserved