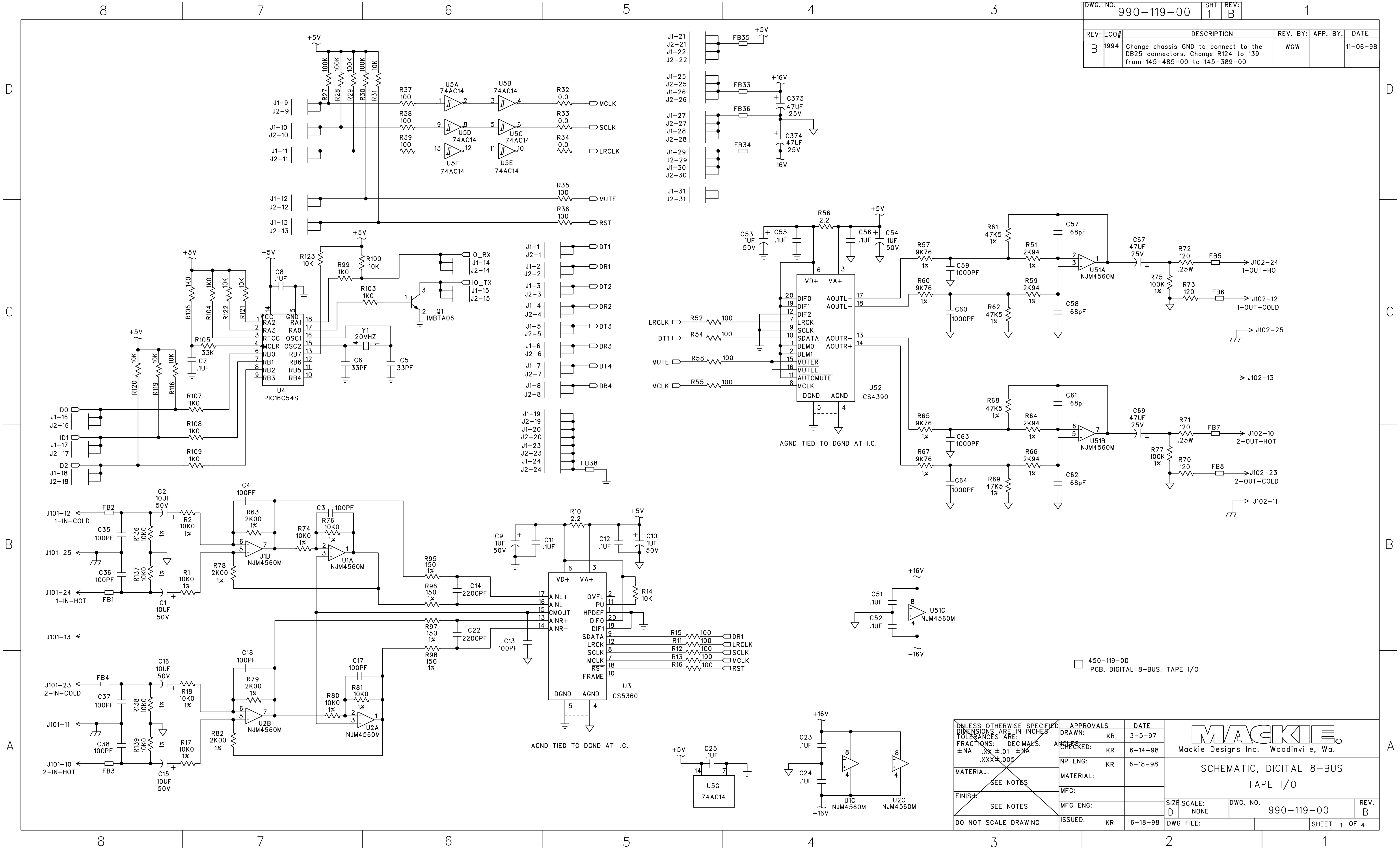

8
7
6
5
4
3
2
1
D
C
B
A
+5V
100K
R27
R28
R29
R30
R31
10K
J1-9
J2-9
J1-10
J2-10
J1-11
J2-11
J1-12
J2-12
J1-13
J2-13
R37
100
R38
100
R39
100
U5A
74AC14
U5B
74AC14
U5D
74AC14
U5C
74AC14
U5F
74AC14
U5E
74AC14
R32
0.0
R33
0.0
R34
0.0
R35
100
R36
100
MCLK
SCLK
LRCLK
MUTE
RST
J1-21
J2-21
J1-22
J2-22
FB35
J1-25
J2-25
J1-26
J2-26
FB33
+16V
C373
47UF
25V
FB36
J1-27
J2-27
J1-28
J2-28
C374
47UF
25V
FB34
J1-29
J2-29
J1-30
J2-30
-16V
J1-31
J2-31
R123
10K
R100
10K
R99
1K0
C8
.1UF
R103
1K0
Q1
IMBTA06
IO_RX
J1-14
J2-14
IO_TX
J1-15
J2-15
R106
R104
R122
R121
1K0
R105
33K
C7
.1UF
Y1
20MHZ
C6
33PF
C5
33PF
VCC
RA2
RA3
RTCC
MCLR
RB0
RB1
RB2
RB3
GND
RA1
RA0
OSC1
OSC2
RB7
RB6
RB5
RB4
U4
PIC16C54S
R120
R119
R116
R107
1K0
R108
1K0
R109
1K0
ID0
J1-16
J2-16
ID1
J1-17
J2-17
ID2
J1-18
J2-18
J1-1
J2-1
DT1
J1-2
J2-2
DR1
J1-3
J2-3
DT2
J1-4
J2-4
DR2
J1-5
J2-5
DT3
J1-6
J2-6
DR3
J1-7
J2-7
DT4
J1-8
J2-8
DR4
J1-19
J2-19
J1-20
J2-20
J1-23
J2-23
J1-24
J2-24
FB38
R56
2.2
C53
1UF
50V
C55
.1UF
C56
.1UF
C54
1UF
50V
VD+
VA+
DIF0
DIF1
DIF2
LRCK
SCLK
SDATA
DEM0
DEM1
MUTER
MUTEL
AUTOMUTE
MCLK
AOUTL-
AOUTL+
AOUTR-
AOUTR+
DGND
AGND
U52
CS4390
AGND TIED TO DGND AT I.C.
LRCLK
R52 100
DT1
R54 100
MUTE
R58 100
MCLK
R55 100
R57
9K76
1%
C59
1000PF
R60
9K76
1%
C60
1000PF
R61
47K5
1%
R51
2K94
1%
R59
2K94
1%
R62
47K5
1%
C57
68pF
C58
68pF
U51A
NJM4560M
C67
47UF
25V
R72
120
.25W
FB5
J102-24
1-OUT-HOT
R75
100K
1%
R73
120
FB6
J102-12
1-OUT-COLD
J102-25
J102-13
R65
9K76
1%
C63
1000PF
R67
9K76
1%
C64
1000PF
R68
47K5
1%
R64
2K94
1%
R66
2K94
1%
R69
47K5
1%
C61
68pF
C62
68pF
U51B
NJM4560M
C69
47UF
25V
R71
120
.25W
FB7
J102-10
2-OUT-HOT
R77
100K
1%
R70
120
FB8
J102-23
2-OUT-COLD
J102-11
J101-12
1-IN-COLD
FB2
C35
100PF
R136
10K0
1%
C2
10UF
50V
R2
10K0
1%
J101-25
C36
100PF
R137
10K0
1%
J101-24
1-IN-HOT
FB1
R1
10K0
1%
C1
10UF
50V
C4
100PF
R63
2K00
1%
U1B
NJM4560M
R78
2K00
1%
R74
10K0
1%
C3
100PF
R76
10K0
1%
U1A
NJM4560M
R95
150
1%
R96
150
1%
C14
2200PF
R97
150
1%
R98
150
1%
C22
2200PF
C13
100PF
J101-13
J101-23
2-IN-COLD
FB4
C37
100PF
R138
10K0
1%
C16
10UF
50V
R18
10K0
1%
J101-11
C38
100PF
R139
10K0
1%
R17
10K0
1%
J101-10
2-IN-HOT
FB3
C15
10UF
50V
C18
100PF
R79
2K00
1%
U2B
NJM4560M
R82
2K00
1%
R80
10K0
1%
C17
100PF
R81
10K0
1%
U2A
NJM4560M
C9
1UF
50V
C11
.1UF
R10
2.2
C12
.1UF
C10
1UF
50V
R14
10K
VD+
VA+
AINL+
AINL-
CMOUT
AINR+
AINR-
OVFL
PU
HPDEF
DIF0
DIF1
SDATA
LRCK
SCLK
MCLK
RST
FRAME
DGND
AGND
U3
CS5360
AGND TIED TO DGND AT I.C.
R15 100 DR1
R11 100 LRCLK
R12 100 SCLK
R13 100 MCLK
R16 100 RST
C51
.1UF
C52
.1UF
U51C
NJM4560M
+16V
-16V
450-119-00
PCB, DIGITAL 8-BUS: TAPE I/O
+5V
C25
.1UF
U5G
74AC14
C23
.1UF
C24
.1UF
U1C
NJM4560M
U2C
NJM4560M

DWG. NO. 990-119-00 | SHT 1 | REV: B

REV:	ECO#	DESCRIPTION	REV. BY:	APP. BY:	DATE
B	1994	Change chassis GND to connect to the DB25 connectors. Change R124 to 139 from 145-485-00 to 145-389-00	WGW		11-06-98

UNLESS OTHERWISE SPECIFIED DIMENSIONS ARE IN INCHES
TOLERANCES ARE:
FRACTIONS: DECIMALS: ANGLES:
±NA .XX ±.01 ±NA
.XXX±.005
MATERIAL:
SEE NOTES
FINISH:
SEE NOTES
DO NOT SCALE DRAWING

APPROVALS		DATE
DRAWN:	KR	3-5-97
CHECKED:	KR	6-14-98
NP ENG:	KR	6-18-98
MATERIAL:		
MFG:		
MFG ENG:		
ISSUED:	KR	6-18-98

MACKIE.
Mackie Designs Inc. Woodinville, Wa.

SCHEMATIC, DIGITAL 8-BUS TAPE I/O

SIZE D | SCALE: NONE | DWG. NO. 990-119-00 | REV. B
DWG FILE: | SHEET 1 OF 4

This file contains schematics for the AIO-8 Analog I/O card, the PDI-8 AES/EBU card and the OPT-8 Optical card

HDR HOME

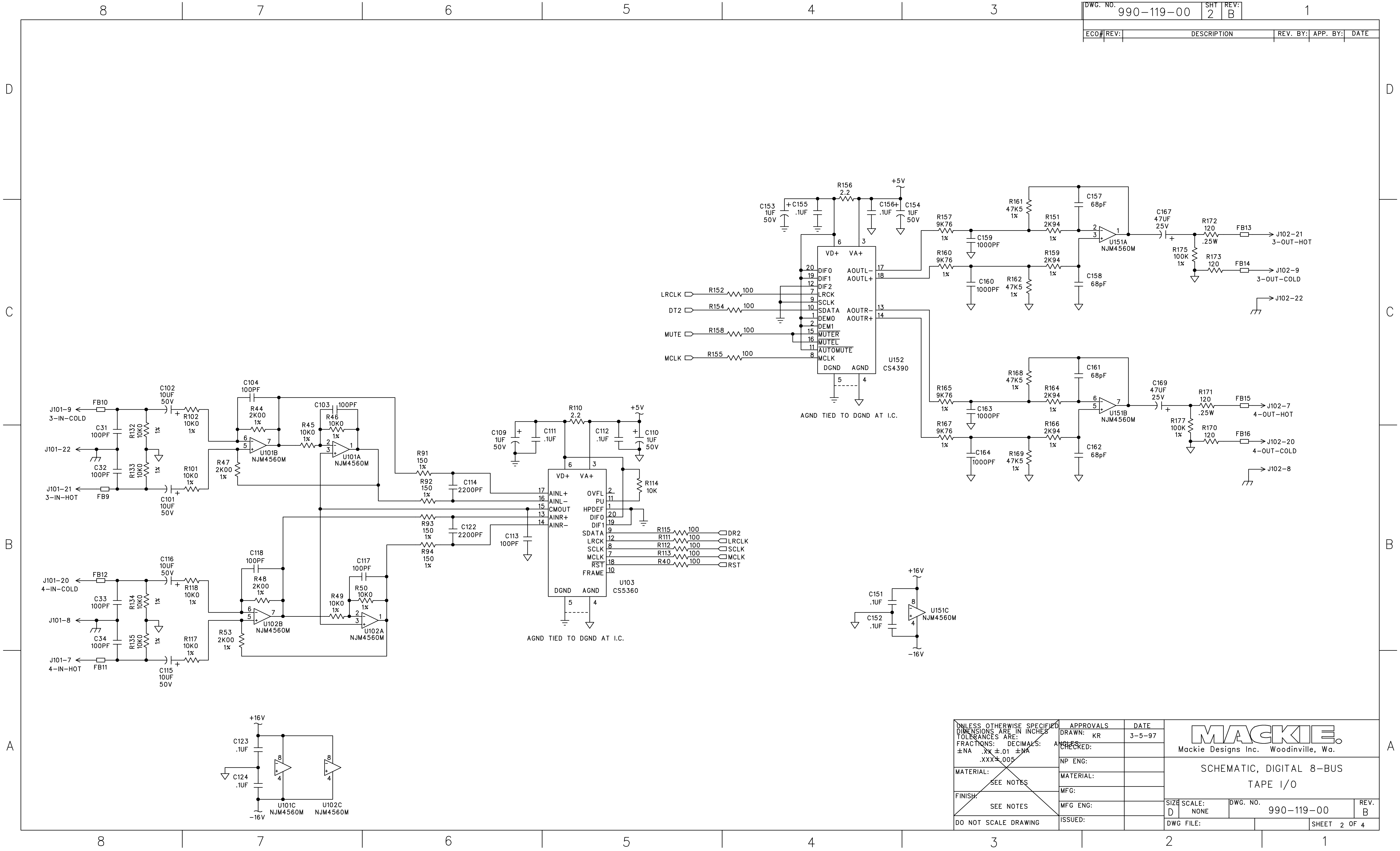
DWG. NO. 990-119-00
SHT 2
REV: B
ECO# REV: DESCRIPTION REV. BY: APP. BY: DATE
8 7 6 5 4 3 2 1
D C B A
J101-9 3-IN-COLD
FB10
C102 10UF 50V
R102 10K0 1%
C31 100PF
R132 10K0 1%
J101-22
C32 100PF
R133 10K0 1%
J101-21 3-IN-HOT
FB9
C101 10UF 50V
R101 10K0 1%
C104 100PF
R44 2K00 1%
U101B NJM4560M
R47 2K00 1%
C103 100PF
R46 10K0 1%
R45 10K0 1%
U101A NJM4560M
R91 150 1%
R92 150 1%
C114 2200PF
R93 150 1%
R94 150 1%
C122 2200PF
C113 100PF
J101-20 4-IN-COLD
FB12
C116 10UF 50V
R118 10K0 1%
C33 100PF
R134 10K0 1%
J101-8
C34 100PF
R135 10K0 1%
J101-7 4-IN-HOT
FB11
C115 10UF 50V
R117 10K0 1%
C118 100PF
R48 2K00 1%
U102B NJM4560M
R53 2K00 1%
C117 100PF
R50 10K0 1%
R49 10K0 1%
U102A NJM4560M
C109 1UF 50V
C111 .1UF
R110 2.2
C112 .1UF
+5V
C110 1UF 50V
R114 10K
U103 CS5360
VD+ VA+ AINL+ AINL- CMOUT AINR+ AINR- OVFL PU HPDEF DIF0 DIF1 SDATA LRCK SCLK MCLK RST FRAME DGND AGND
R115 100 DR2
R111 100 LRCLK
R112 100 SCLK
R113 100 MCLK
R40 100 RST
AGND TIED TO DGND AT I.C.
+16V
C123 .1UF
C124 .1UF
-16V
U101C NJM4560M
U102C NJM4560M
R156 2.2
+5V
C153 1UF 50V
C155 .1UF
C156 .1UF
C154 1UF 50V
U152 CS4390
VD+ VA+ DIF0 DIF1 DIF2 LRCK SCLK SDATA DEM0 DEM1 MUTER MUTEL AUTOMUTE MCLK DGND AGND AOUTL- AOUTL+ AOUTR- AOUTR+
LRCLK R152 100
DT2 R154 100
MUTE R158 100
MCLK R155 100
AGND TIED TO DGND AT I.C.
R157 9K76 1%
C159 1000PF
R161 47K5 1%
R151 2K94 1%
C157 68pF
U151A NJM4560M
R160 9K76 1%
C160 1000PF
R162 47K5 1%
R159 2K94 1%
C158 68pF
C167 47UF 25V
R172 120 .25W
FB13
J102-21 3-OUT-HOT
R175 100K 1%
R173 120
FB14
J102-9 3-OUT-COLD
J102-22
R165 9K76 1%
C163 1000PF
R168 47K5 1%
R164 2K94 1%
C161 68pF
U151B NJM4560M
R167 9K76 1%
C164 1000PF
R169 47K5 1%
R166 2K94 1%
C162 68pF
C169 47UF 25V
R171 120 .25W
FB15
J102-7 4-OUT-HOT
R177 100K 1%
R170 120
FB16
J102-20 4-OUT-COLD
J102-8
+16V
C151 .1UF
C152 .1UF
U151C NJM4560M
-16V
UNLESS OTHERWISE SPECIFIED DIMENSIONS ARE IN INCHES TOLERANCES ARE: FRACTIONS: ±NA DECIMALS: .XX ±.01 .XXX ±.005 ANGLES: ±NA
MATERIAL: SEE NOTES
FINISH: SEE NOTES
DO NOT SCALE DRAWING
APPROVALS DATE
DRAWN: KR 3-5-97
CHECKED:
NP ENG:
MATERIAL:
MFG:
MFG ENG:
ISSUED:
MACKIE.
Mackie Designs Inc. Woodinville, Wa.
SCHEMATIC, DIGITAL 8-BUS TAPE I/O
SIZE D
SCALE: NONE
DWG. NO. 990-119-00
REV. B
DWG FILE:
SHEET 2 OF 4

HDR HOME

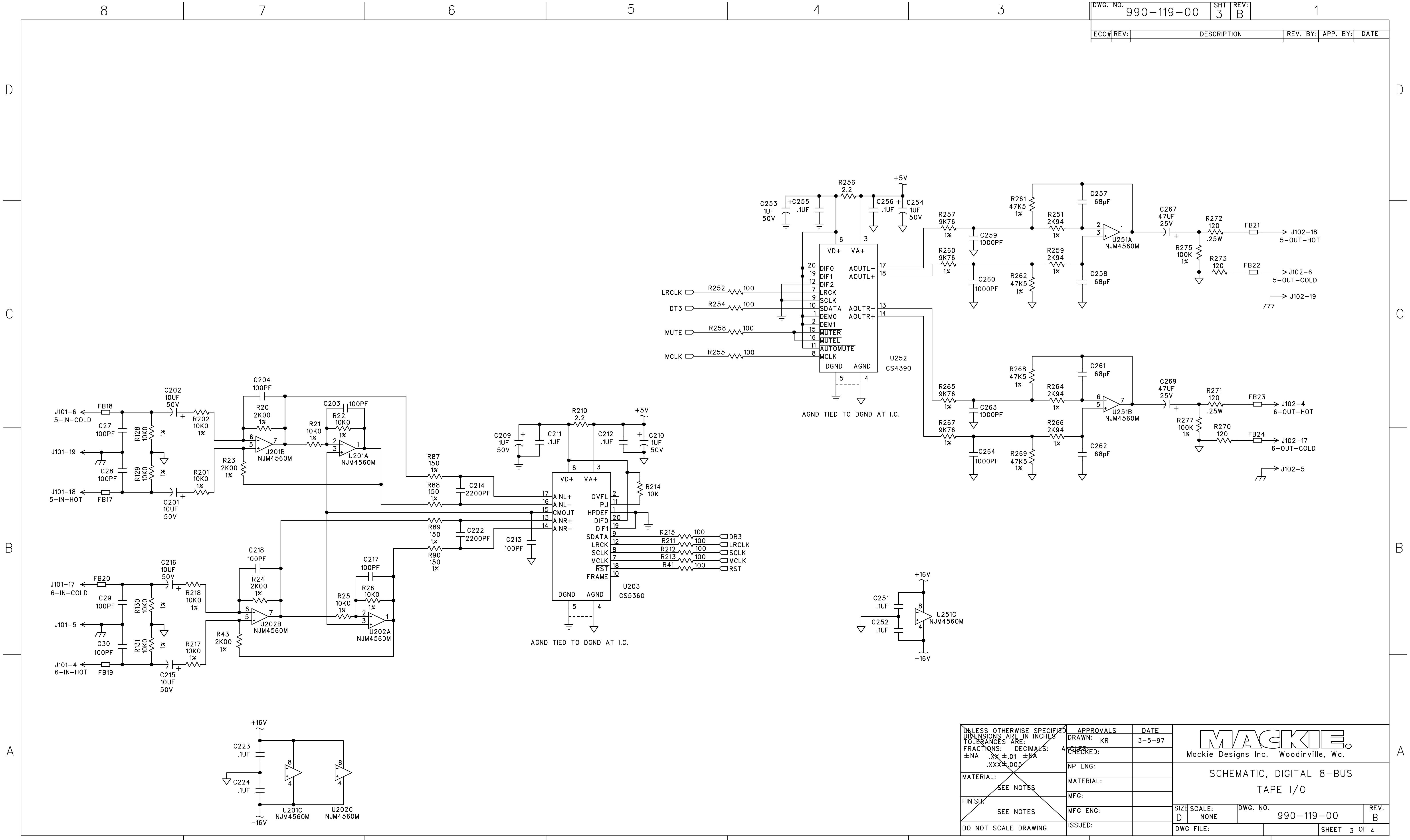

DWG. NO. 990-119-00
SHT 3
REV: B
ECO# REV: DESCRIPTION REV. BY: APP. BY: DATE
8 7 6 5 4 3 2 1
D C B A
+5V
R256 2.2
C253 1UF 50V
C255 .1UF
C256 .1UF
C254 1UF 50V
VD+ VA+
DIF0 DIF1 DIF2 LRCK SCLK SDATA DEM0 DEM1 MUTER MUTEL AUTOMUTE MCLK
AOUTL- AOUTL+ AOUTR- AOUTR+
DGND AGND
U252 CS4390
LRCLK R252 100
DT3 R254 100
MUTE R258 100
MCLK R255 100
AGND TIED TO DGND AT I.C.
R257 9K76 1%
C259 1000PF
R260 9K76 1%
C260 1000PF
R261 47K5 1%
R262 47K5 1%
R251 2K94 1%
R259 2K94 1%
C257 68pF
C258 68pF
U251A NJM4560M
C267 47UF 25V
R272 120 .25W
FB21
J102-18 5-OUT-HOT
R275 100K 1%
R273 120
FB22
J102-6 5-OUT-COLD
J102-19
R265 9K76 1%
C263 1000PF
R267 9K76 1%
C264 1000PF
R268 47K5 1%
R269 47K5 1%
R264 2K94 1%
R266 2K94 1%
C261 68pF
C262 68pF
U251B NJM4560M
C269 47UF 25V
R271 120 .25W
FB23
J102-4 6-OUT-HOT
R277 100K 1%
R270 120
FB24
J102-17 6-OUT-COLD
J102-5
+16V
C251 .1UF
C252 .1UF
U251C NJM4560M
-16V
J101-6 5-IN-COLD
FB18
C27 100PF
C202 10UF 50V
R202 10K0 1%
R128 10K0 1%
J101-19
C28 100PF
R129 10K0 1%
J101-18 5-IN-HOT
FB17
C201 10UF 50V
R201 10K0 1%
C204 100PF
R20 2K00 1%
U201B NJM4560M
R23 2K00 1%
R21 10K0 1%
C203 100PF
R22 10K0 1%
U201A NJM4560M
R87 150 1%
R88 150 1%
C214 2200PF
R89 150 1%
R90 150 1%
C222 2200PF
C213 100PF
C209 1UF 50V
C211 .1UF
R210 2.2
C212 .1UF
C210 1UF 50V
+5V
VD+ VA+
AINL+ AINL- CMOUT AINR+ AINR-
OVFL PU HPDEF DIF0 DIF1 SDATA LRCK SCLK MCLK RST FRAME
DGND AGND
U203 CS5360
R214 10K
R215 100 DR3
R211 100 LRCLK
R212 100 SCLK
R213 100 MCLK
R41 100 RST
AGND TIED TO DGND AT I.C.
J101-17 6-IN-COLD
FB20
C29 100PF
C216 10UF 50V
R218 10K0 1%
R130 10K0 1%
J101-5
C30 100PF
R131 10K0 1%
J101-4 6-IN-HOT
FB19
C215 10UF 50V
R217 10K0 1%
C218 100PF
R24 2K00 1%
U202B NJM4560M
R43 2K00 1%
R25 10K0 1%
C217 100PF
R26 10K0 1%
U202A NJM4560M
+16V
C223 .1UF
C224 .1UF
U201C NJM4560M
U202C NJM4560M
-16V

UNLESS OTHERWISE SPECIFIED DIMENSIONS ARE IN INCHES
TOLERANCES ARE:
FRACTIONS: ±NA
DECIMALS: .XX ±.01 .XXX ±.005
ANGLES: ±NA
MATERIAL: SEE NOTES
FINISH: SEE NOTES
DO NOT SCALE DRAWING

APPROVALS	DATE
DRAWN: KR	3-5-97
CHECKED:	
NP ENG:	
MATERIAL:	
MFG:	
MFG ENG:	
ISSUED:	

MACKIE.
Mackie Designs Inc. Woodinville, Wa.

SCHEMATIC, DIGITAL 8-BUS
TAPE I/O

SIZE D
SCALE: NONE
DWG. NO. 990-119-00
REV. B
DWG FILE:
SHEET 3 OF 4

DWG. NO. 990-119-00 SHT 4 REV: B

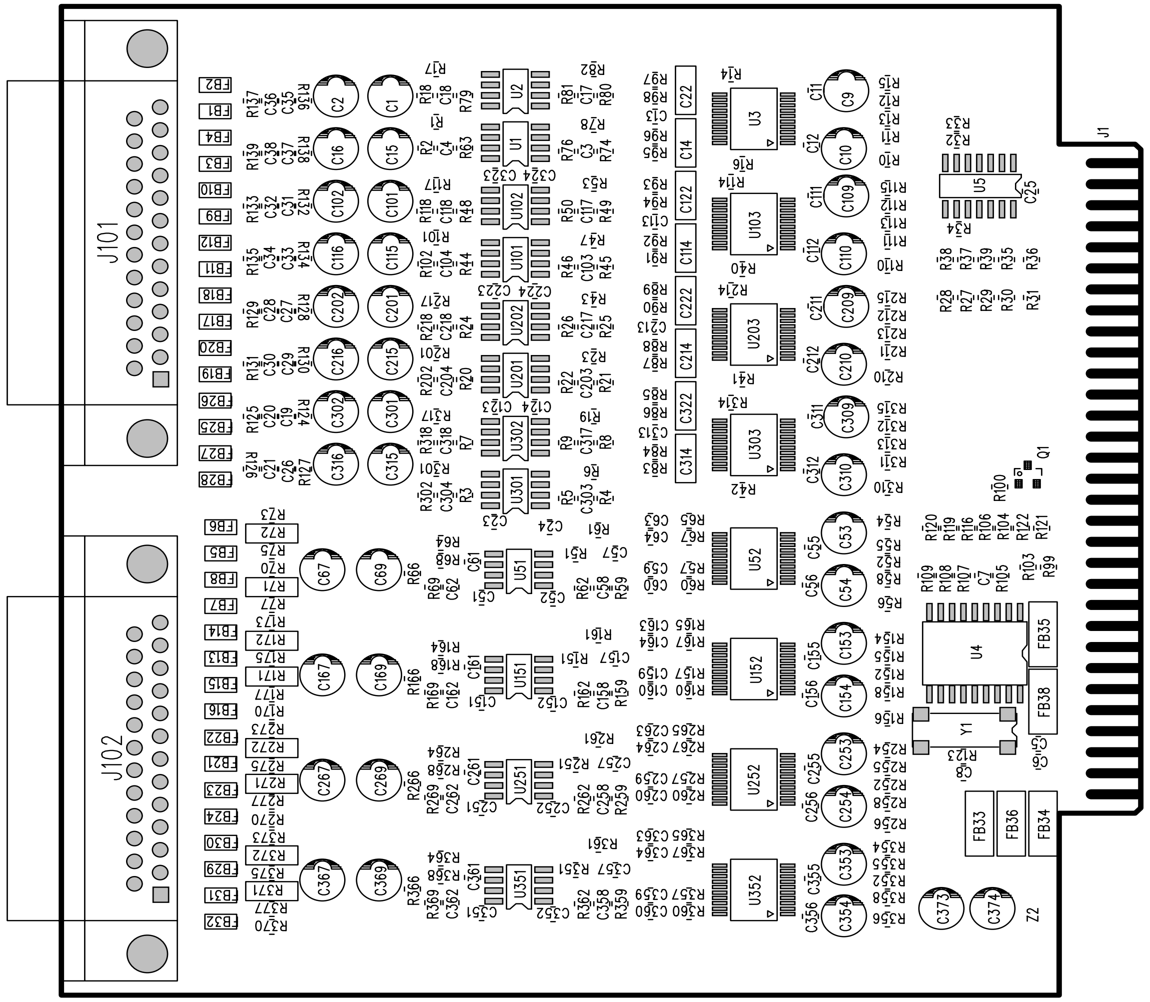
J101
J102
J1
U1
U2
U3
U4
U5
U51
U52
U101
U102
U103
U151
U152
U201
U202
U203
U251
U252
U301
U302
U303
U351
U352
Y1
Q1
Z2
FB33
FB34
FB35
FB36
FB38
C373
C374

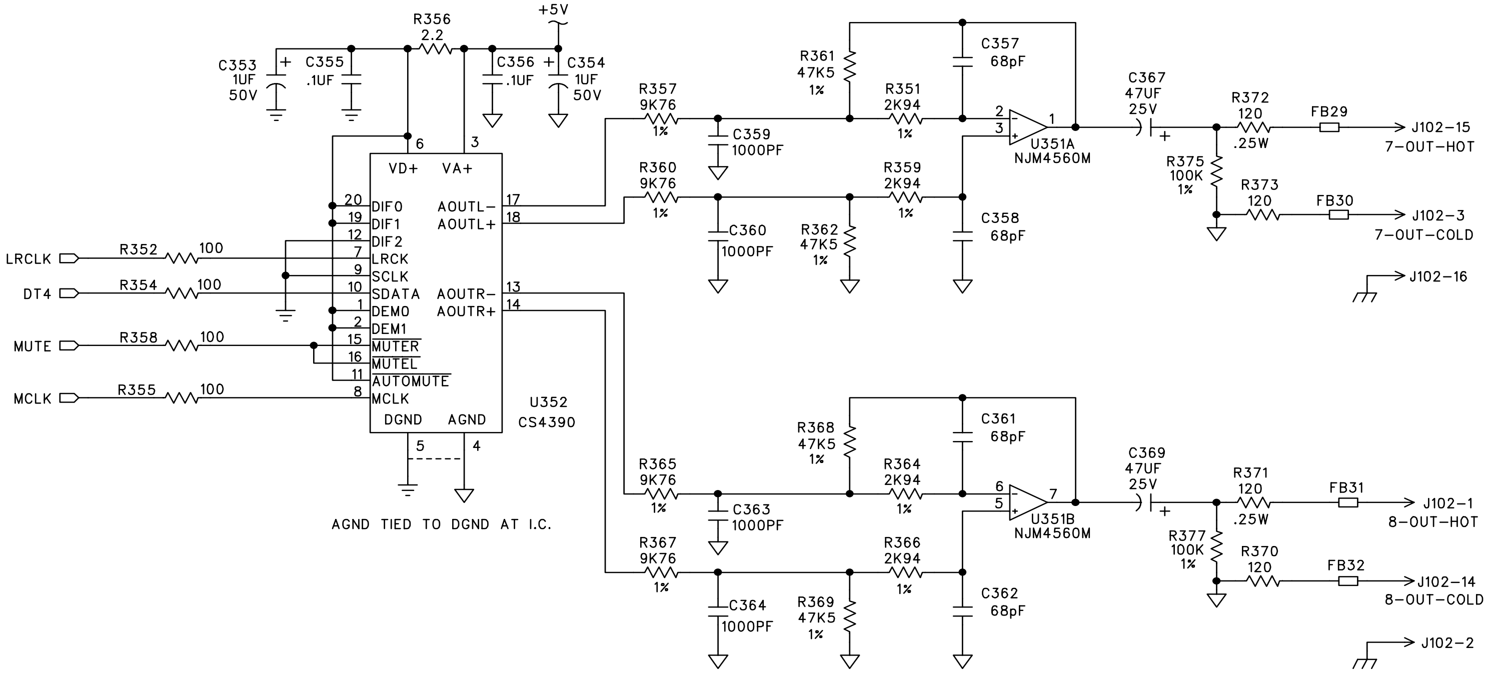
R356
2.2
+5V
C353
1UF
50V
C355
.1UF
C356
.1UF
C354
1UF
50V
VD+
VA+
DIF0
DIF1
DIF2
LRCK
SCLK
SDATA
DEM0
DEM1
MUTER
MUTEL
AUTOMUTE
MCLK
DGND
AGND
AOUTL-
AOUTL+
AOUTR-
AOUTR+
U352
CS4390
AGND TIED TO DGND AT I.C.
LRCLK
R352 100
DT4
R354 100
MUTE
R358 100
MCLK
R355 100
R357 9K76 1%
R360 9K76 1%
C359 1000PF
C360 1000PF
R361 47K5 1%
R362 47K5 1%
R351 2K94 1%
R359 2K94 1%
C357 68pF
C358 68pF
U351A
NJM4560M
C367 47UF 25V
R372 120 .25W
R375 100K 1%
R373 120
FB29
FB30
J102-15
7-OUT-HOT
J102-3
7-OUT-COLD
J102-16
R365 9K76 1%
R367 9K76 1%
C363 1000PF
C364 1000PF
R368 47K5 1%
R369 47K5 1%
R364 2K94 1%
R366 2K94 1%
C361 68pF
C362 68pF
U351B
NJM4560M
C369 47UF 25V
R371 120 .25W
R377 100K 1%
R370 120
FB31
FB32
J102-1
8-OUT-HOT
J102-14
8-OUT-COLD
J102-2

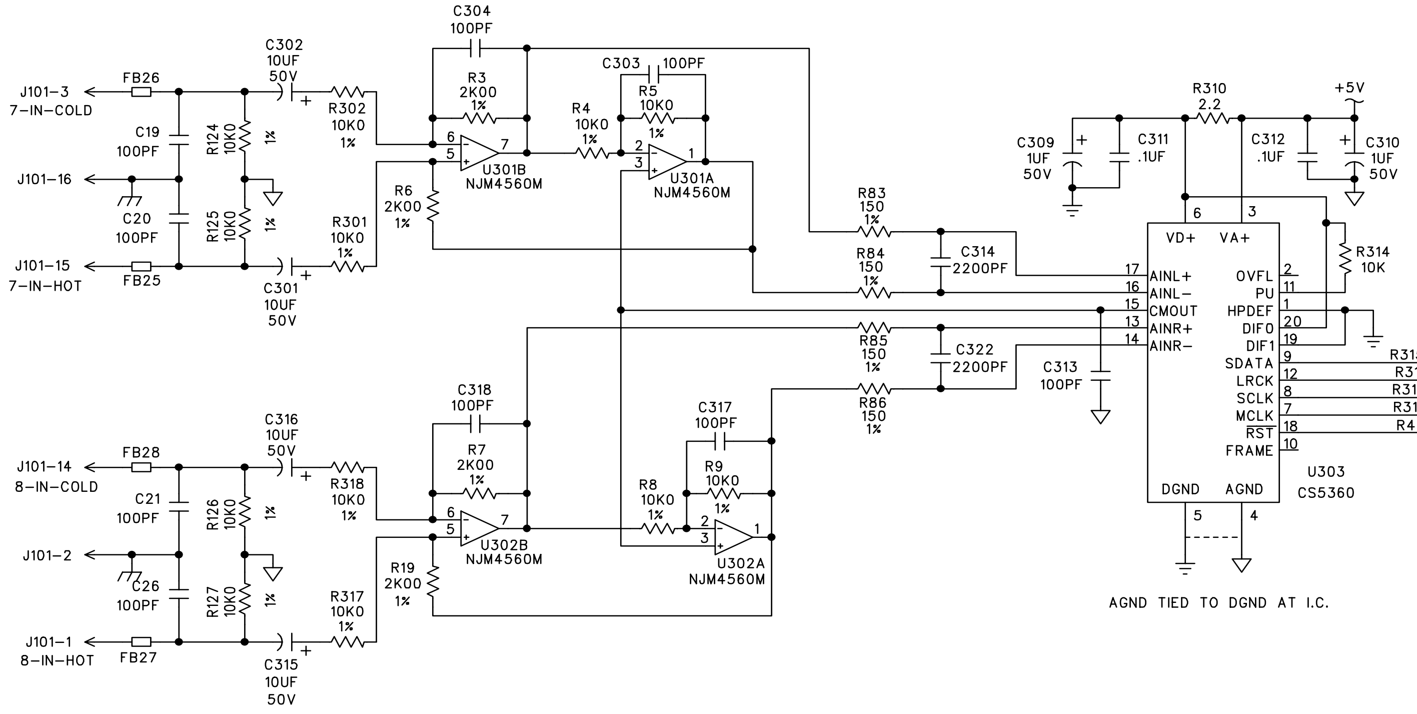
J101-3
7-IN-COLD
FB26
C302 10UF 50V
R302 10K0 1%
C19 100PF
R124 10K0 1%
J101-16
C20 100PF
R125 10K0 1%
J101-15
7-IN-HOT
FB25
C301 10UF 50V
R301 10K0 1%
C304 100PF
R3 2K00 1%
U301B
NJM4560M
R6 2K00 1%
C303 100PF
R5 10K0 1%
R4 10K0 1%
U301A
NJM4560M
R83 150 1%
R84 150 1%
C314 2200PF
R85 150 1%
R86 150 1%
C322 2200PF
C313 100PF
C309 1UF 50V
C311 .1UF
R310 2.2
+5V
C312 .1UF
C310 1UF 50V
VD+
VA+
AINL+
AINL-
CMOUT
AINR+
AINR-
OVFL
PU
HPDEF
DIF0
DIF1
SDATA
LRCK
SCLK
MCLK
RST
FRAME
DGND
AGND
U303
CS5360
R314 10K
R315 100
R311 100
R312 100
R313 100
R42 100
DR4
LRCLK
SCLK
MCLK
RST
AGND TIED TO DGND AT I.C.
J101-14
8-IN-COLD
FB28
C316 10UF 50V
R318 10K0 1%
C21 100PF
R126 10K0 1%
J101-2
C26 100PF
R127 10K0 1%
J101-1
8-IN-HOT
FB27
C315 10UF 50V
R317 10K0 1%
C318 100PF
R7 2K00 1%
U302B
NJM4560M
R19 2K00 1%
C317 100PF
R9 10K0 1%
R8 10K0 1%
U302A
NJM4560M

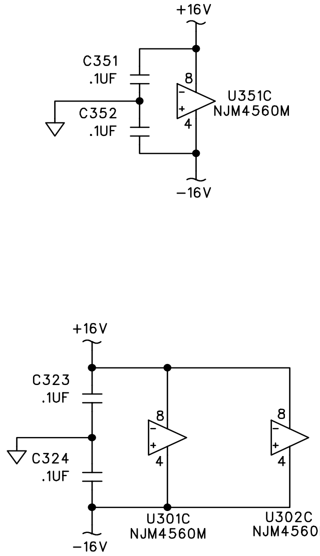
+16V
C351 .1UF
C352 .1UF
U351C
NJM4560M
-16V
+16V
C323 .1UF
C324 .1UF
-16V
U301C
NJM4560M
U302C
NJM4560M

UNLESS OTHERWISE SPECIFIED
DIMENSIONS ARE IN INCHES
TOLERANCES ARE:
FRACTIONS: DECIMALS: ANGLES:
±NA .XX ±.01 ±NA
.XXX±.005

MATERIAL:
SEE NOTES

FINISH:
SEE NOTES

DO NOT SCALE DRAWING

APPROVALS		DATE
DRAWN:	KR	3-5-97
CHECKED:		
NP ENG:		
MATERIAL:		
MFG:		
MFG ENG:		
ISSUED:		

MACKIE.
Mackie Designs Inc. Woodinville, Wa.

SCHEMATIC, DIGITAL 8-BUS
TAPE I/O

SIZE D
SCALE: NONE
DWG. NO. 990-119-00
REV. B
DWG FILE:
SHEET 4 OF 4

HDR HOME

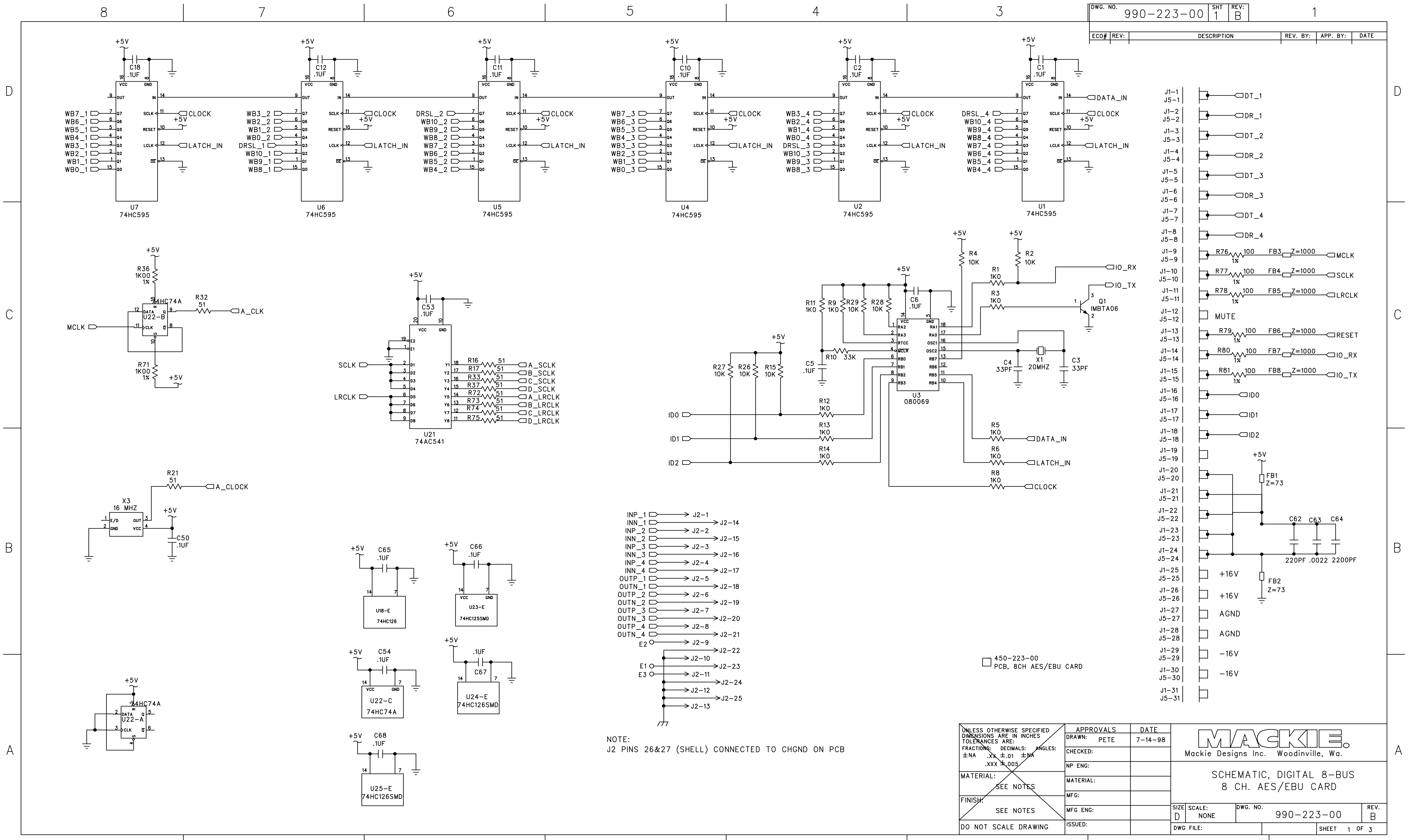

U7 74HC595
U6 74HC595
U5 74HC595
U4 74HC595
U2 74HC595
U1 74HC595
C18 .1UF
C12 .1UF
C11 .1UF
C10 .1UF
C2 .1UF
C1 .1UF
+5V
CLOCK
LATCH_IN
DATA_IN
WB7_1
WB6_1
WB5_1
WB4_1
WB3_1
WB2_1
WB1_1
WB0_1
WB3_2
WB2_2
WB1_2
WB0_2
DRSL_1
WB10_1
WB9_1
WB8_1
DRSL_2
WB10_2
WB9_2
WB8_2
WB7_2
WB6_2
WB5_2
WB4_2
WB7_3
WB6_3
WB5_3
WB4_3
WB3_3
WB2_3
WB1_3
WB0_3
WB3_4
WB2_4
WB1_4
WB0_4
DRSL_3
WB10_3
WB9_3
WB8_3
DRSL_4
WB10_4
WB9_4
WB8_4
WB7_4
WB6_4
WB5_4
WB4_4
R36 1K00 1%
74HC74A U22-B
R32 51
A_CLK
MCLK
R71 1K00 1%
C53 .1UF
U21 74AC541
SCLK
LRCLK
R16 R17 R33 R37 R72 R73 R74 R75 51
A_SCLK
B_SCLK
C_SCLK
D_SCLK
A_LRCLK
B_LRCLK
C_LRCLK
D_LRCLK
R21 51
A_CLOCK
X3 16 MHZ
C50 .1UF
C65 .1UF U18-E 74HC126
C66 .1UF U23-E 74HC125SMD
C54 .1UF U22-C 74HC74A
.1UF C67 U24-E 74HC126SMD
C68 .1UF U25-E 74HC126SMD
74HC74A U22-A
R4 10K
R2 10K
R1 1K0
R3 1K0
IO_RX
IO_TX
Q1 IMBTA06
C6 .1UF
R11 1K0
R9 1K0
R29 10K
R28 10K
U3 080069
R10 33K
C5 .1UF
C4 33PF
X1 20MHZ
C3 33PF
R27 10K
R26 10K
R15 10K
R12 1K0
R13 1K0
R14 1K0
ID0
ID1
ID2
R5 1K0
R6 1K0
R8 1K0
INP_1 J2-1
INN_1 J2-14
INP_2 J2-2
INN_2 J2-15
INP_3 J2-3
INN_3 J2-16
INP_4 J2-4
INN_4 J2-17
OUTP_1 J2-5
OUTN_1 J2-18
OUTP_2 J2-6
OUTN_2 J2-19
OUTP_3 J2-7
OUTN_3 J2-20
OUTP_4 J2-8
OUTN_4 J2-21
E2 J2-9
E1
E3
J2-22
J2-10
J2-23
J2-11
J2-24
J2-12
J2-25
J2-13
450-223-00 PCB, 8CH AES/EBU CARD
J1-1 J5-1 DT_1
J1-2 J5-2 DR_1
J1-3 J5-3 DT_2
J1-4 J5-4 DR_2
J1-5 J5-5 DT_3
J1-6 J5-6 DR_3
J1-7 J5-7 DT_4
J1-8 J5-8 DR_4
J1-9 J5-9 R76 100 1% FB3 Z=1000 MCLK
J1-10 J5-10 R77 100 1% FB4 Z=1000 SCLK
J1-11 J5-11 R78 100 1% FB5 Z=1000 LRCLK
J1-12 J5-12 MUTE
J1-13 J5-13 R79 100 1% FB6 Z=1000 RESET
J1-14 J5-14 R80 100 1% FB7 Z=1000 IO_RX
J1-15 J5-15 R81 100 1% FB8 Z=1000 IO_TX
J1-16 J5-16 ID0
J1-17 J5-17 ID1
J1-18 J5-18 ID2
J1-19 J5-19
J1-20 J5-20
J1-21 J5-21
J1-22 J5-22
J1-23 J5-23
J1-24 J5-24
FB1 Z=73
C62 C63 C64
220PF .0022 2200PF
FB2 Z=73
J1-25 J5-25 +16V
J1-26 J5-26 +16V
J1-27 J5-27 AGND
J1-28 J5-28 AGND
J1-29 J5-29 -16V
J1-30 J5-30 -16V
J1-31 J5-31
8 7 6 5 4 3 2 1
D C B A

NOTE:
J2 PINS 26&27 (SHELL) CONNECTED TO CHGND ON PCB

DWG. NO.	SHT	REV:
990-223-00	1	B

ECO#	REV:	DESCRIPTION	REV. BY:	APP. BY:	DATE

UNLESS OTHERWISE SPECIFIED DIMENSIONS ARE IN INCHES TOLERANCES ARE:
FRACTIONS: ±NA DECIMALS: .XX ±.01 .XXX ±.005 ANGLES: ±NA
MATERIAL: SEE NOTES
FINISH: SEE NOTES
DO NOT SCALE DRAWING

APPROVALS	DATE
DRAWN: PETE	7-14-98
CHECKED:	
NP ENG:	
MATERIAL:	
MFG:	
MFG ENG:	
ISSUED:	

MACKIE.
Mackie Designs Inc. Woodinville, Wa.

SCHEMATIC, DIGITAL 8-BUS
8 CH. AES/EBU CARD

SIZE D SCALE: NONE DWG. NO. 990-223-00 REV. B
DWG FILE: SHEET 1 OF 3

HDR HOME

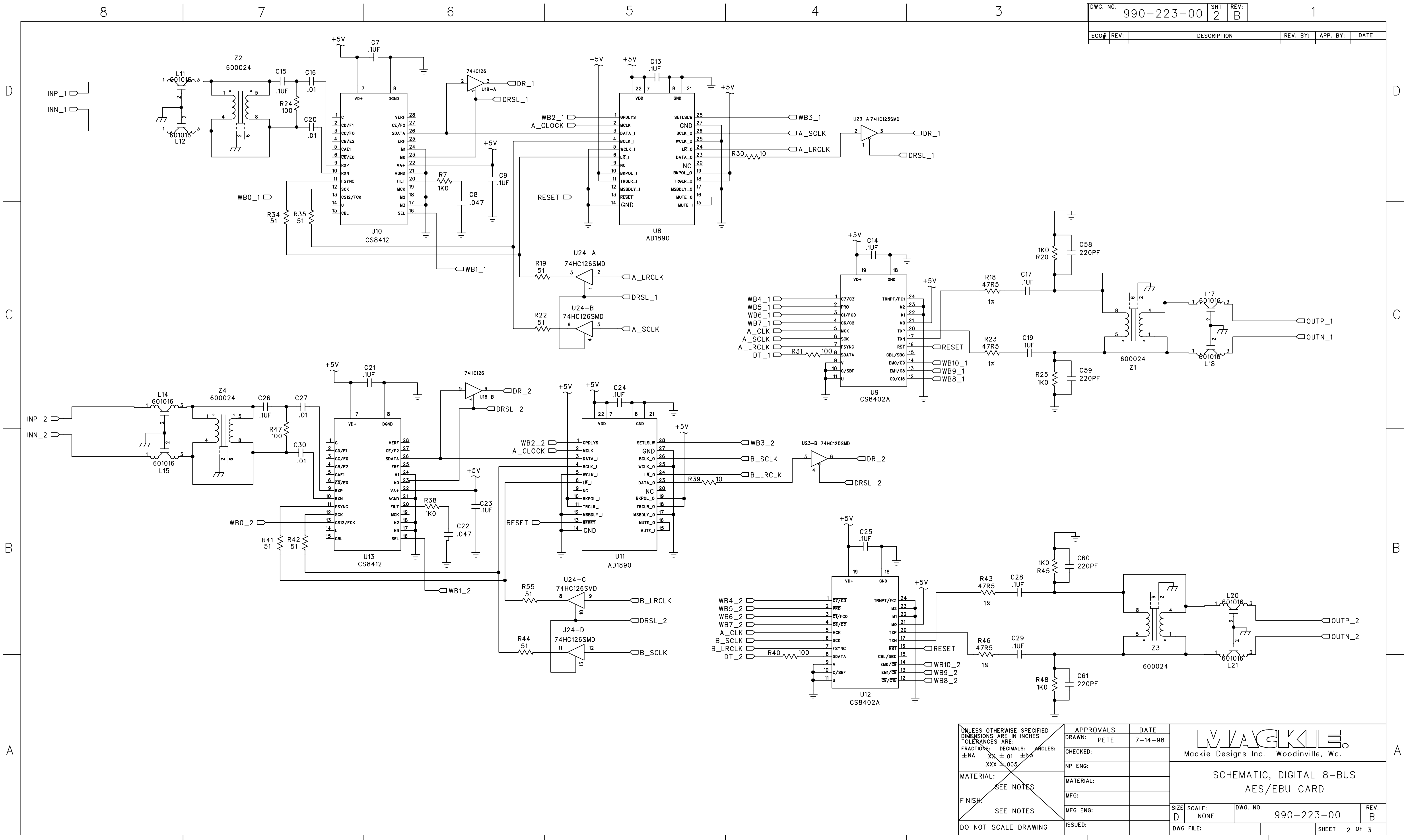
INP_1
INN_1
L11 601016
L12 601016
Z2 600024
C15 .1UF
C16 .01
R24 100
C20 .01
+5V
C7 .1UF
U10 CS8412
R34 51
R35 51
WB0_1
R7 1K0
C8 .047
C9 .1UF
74HC126
U18-A
DR_1
DRSL_1
WB1_1
R19 51
U24-A 74HC126SMD
A_LRCLK
DRSL_1
R22 51
U24-B 74HC126SMD
A_SCLK
WB2_1
A_CLOCK
RESET
C13 .1UF
U8 AD1890
WB3_1
A_SCLK
A_LRCLK
R30 10
U23-A 74HC125SMD
DR_1
DRSL_1
C14 .1UF
WB4_1
WB5_1
WB6_1
WB7_1
A_CLK
A_SCLK
A_LRCLK
DT_1
R31 100
U9 CS8402A
RESET
WB10_1
WB9_1
WB8_1
R18 47R5 1%
C17 .1UF
R23 47R5 1%
C19 .1UF
R20 1K0
C58 220PF
R25 1K0
C59 220PF
Z1 600024
L17 601016
L18 601016
OUTP_1
OUTN_1
INP_2
INN_2
L14 601016
L15 601016
Z4 600024
C26 .1UF
C27 .01
R47 100
C30 .01
C21 .1UF
U13 CS8412
WB0_2
R41 51
R42 51
R38 1K0
C22 .047
C23 .1UF
U18-B
DR_2
DRSL_2
WB1_2
R55 51
U24-C 74HC126SMD
B_LRCLK
DRSL_2
R44 51
U24-D 74HC126SMD
B_SCLK
WB2_2
A_CLOCK
RESET
C24 .1UF
U11 AD1890
WB3_2
B_SCLK
B_LRCLK
R39 10
U23-B 74HC125SMD
DR_2
DRSL_2
C25 .1UF
WB4_2
WB5_2
WB6_2
WB7_2
A_CLK
B_SCLK
B_LRCLK
DT_2
R40 100
U12 CS8402A
RESET
WB10_2
WB9_2
WB8_2
R43 47R5 1%
C28 .1UF
R46 47R5 1%
C29 .1UF
R45 1K0
C60 220PF
R48 1K0
C61 220PF
Z3 600024
L20 601016
L21 601016
OUTP_2
OUTN_2

DWG. NO. 990-223-00 SHT 2 REV: B

ECO#	REV:	DESCRIPTION	REV. BY:	APP. BY:	DATE

UNLESS OTHERWISE SPECIFIED DIMENSIONS ARE IN INCHES TOLERANCES ARE:
FRACTIONS: ±NA DECIMALS: .XX ±.01 .XXX ±.005 ANGLES: ±NA
MATERIAL: SEE NOTES
FINISH: SEE NOTES
DO NOT SCALE DRAWING

APPROVALS	DATE
DRAWN: PETE	7-14-98
CHECKED:	
NP ENG:	
MATERIAL:	
MFG:	
MFG ENG:	
ISSUED:	

MACKIE.
Mackie Designs Inc. Woodinville, Wa.

SCHEMATIC, DIGITAL 8-BUS
AES/EBU CARD

SIZE D SCALE: NONE DWG. NO. 990-223-00 REV. B
DWG FILE: SHEET 2 OF 3

DWG. NO. 990-223-00 SHT 3 REV. B

ECO#	REV:	DESCRIPTION	REV. BY:	APP. BY:	DATE

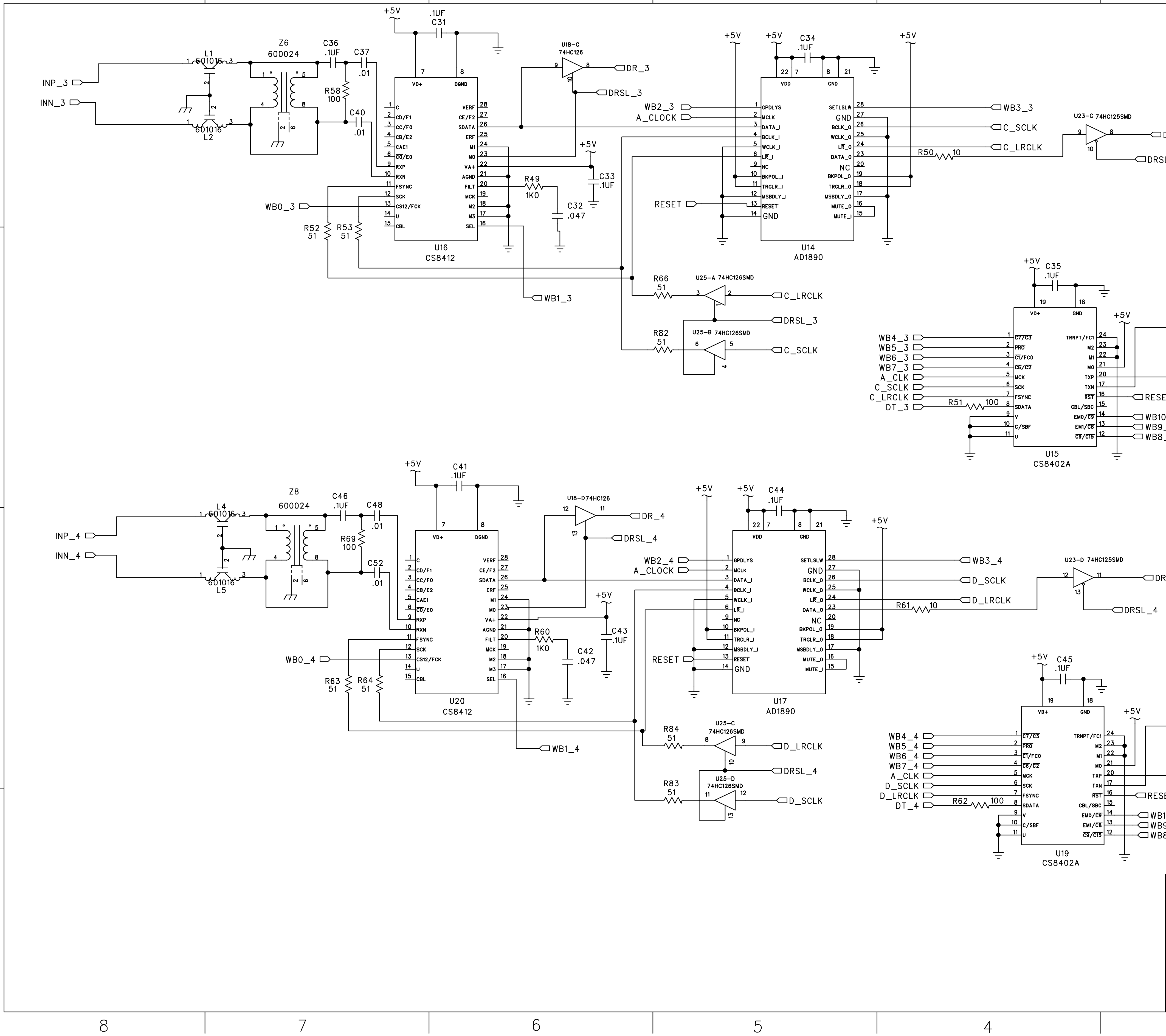

INP_3
INN_3
L1 601016
L2 601016
Z6 600024
C36 .1UF
C37 .01
R58 100
C40 .01
C31 .1UF
+5V
U16 CS8412
VD+ DGND
C CD/F1 CC/F0 CB/E2 CAE1 CO/E0 RXP RXN FSYNC SCK CS12/FCK U CBL
VERF CE/F2 SDATA ERF M1 M0 VA+ AGND FILT MCK M2 M3 SEL
WB0_3
R52 51
R53 51
R49 1K0
C32 .047
C33 .1UF
U18-C 74HC126
DR_3
DRSL_3
WB1_3
WB2_3
A_CLOCK
RESET
C34 .1UF
U14 AD1890
VDD GND
GPDLYS MCLK DATA_I BCLK_I WCLK_I LR_I NC BKPOL_I TRGLR_I MSBDLY_I RESET GND
SETLSLW GND BCLK_O WCLK_O LR_O DATA_O NC BKPOL_O TRGLR_O MSBDLY_O MUTE_O MUTE_I
WB3_3
C_SCLK
C_LRCLK
R50 10
U23-C 74HC125SMD
R66 51
U25-A 74HC126SMD
R82 51
U25-B 74HC126SMD
U15 CS8402A
C35 .1UF
WB4_3 WB5_3 WB6_3 WB7_3 A_CLK C_SCLK C_LRCLK DT_3
C7/C3 PRO C1/FC0 C6/C2 MCK SCK FSYNC SDATA V C/SBF U
TRNPT/FC1 M2 M1 M0 TXP TXN RST CBL/SBC EM0/C9 EM1/C8 C9/C15
R51 100
WB10_3 WB9_3 WB8_3
R54 47R5 1%
R57 47R5 1%
C38 .1UF
C39 .1UF
R56 1K0
C56 220PF
R59 1K0
C57 220PF
600024 1:1 Z5
L7 601016
L8 601016
OUTP_3
OUTN_3
INP_4
INN_4
L4 601016
L5 601016
Z8 600024
C46 .1UF
C48 .01
R69 100
C52 .01
C41 .1UF
U20 CS8412
WB0_4
R63 51
R64 51
R60 1K0
C42 .047
C43 .1UF
U18-D 74HC126
DR_4
DRSL_4
WB1_4
WB2_4
C44 .1UF
U17 AD1890
WB3_4
D_SCLK
D_LRCLK
R61 10
U23-D 74HC125SMD
R84 51
U25-C 74HC126SMD
R83 51
U25-D 74HC126SMD
U19 CS8402A
C45 .1UF
WB4_4 WB5_4 WB6_4 WB7_4 A_CLK D_SCLK D_LRCLK DT_4
R62 100
WB10_4 WB9_4 WB8_4
R65 47R5 1%
R68 47R5 1%
C49 .1UF
C51 .1UF
R67 1K0
C47 220PF
R70 1K0
C55 220PF
Z7 600024 1:1
L23 601016
L24 601016
OUTP_4
OUTN_4
8 7 6 5 4 3 2 1
D C B A

UNLESS OTHERWISE SPECIFIED DIMENSIONS ARE IN INCHES TOLERANCES ARE:
FRACTIONS: ±NA DECIMALS: .XX ±.01 .XXX ±.005 ANGLES: ±NA

MATERIAL: SEE NOTES

FINISH: SEE NOTES

DO NOT SCALE DRAWING

APPROVALS		DATE
DRAWN:	PETE	7-14-98
CHECKED:		
NP ENG:		
MATERIAL:		
MFG:		
MFG ENG:		
ISSUED:		

MACKIE.
Mackie Designs Inc. Woodinville, Wa.

SCHEMATIC, DIGITAL 8-BUS
AES/EBU CARD

SIZE D SCALE: NONE DWG. NO. 990-223-00 REV. B

DWG FILE: SHEET 3 OF 3

HDR HOME

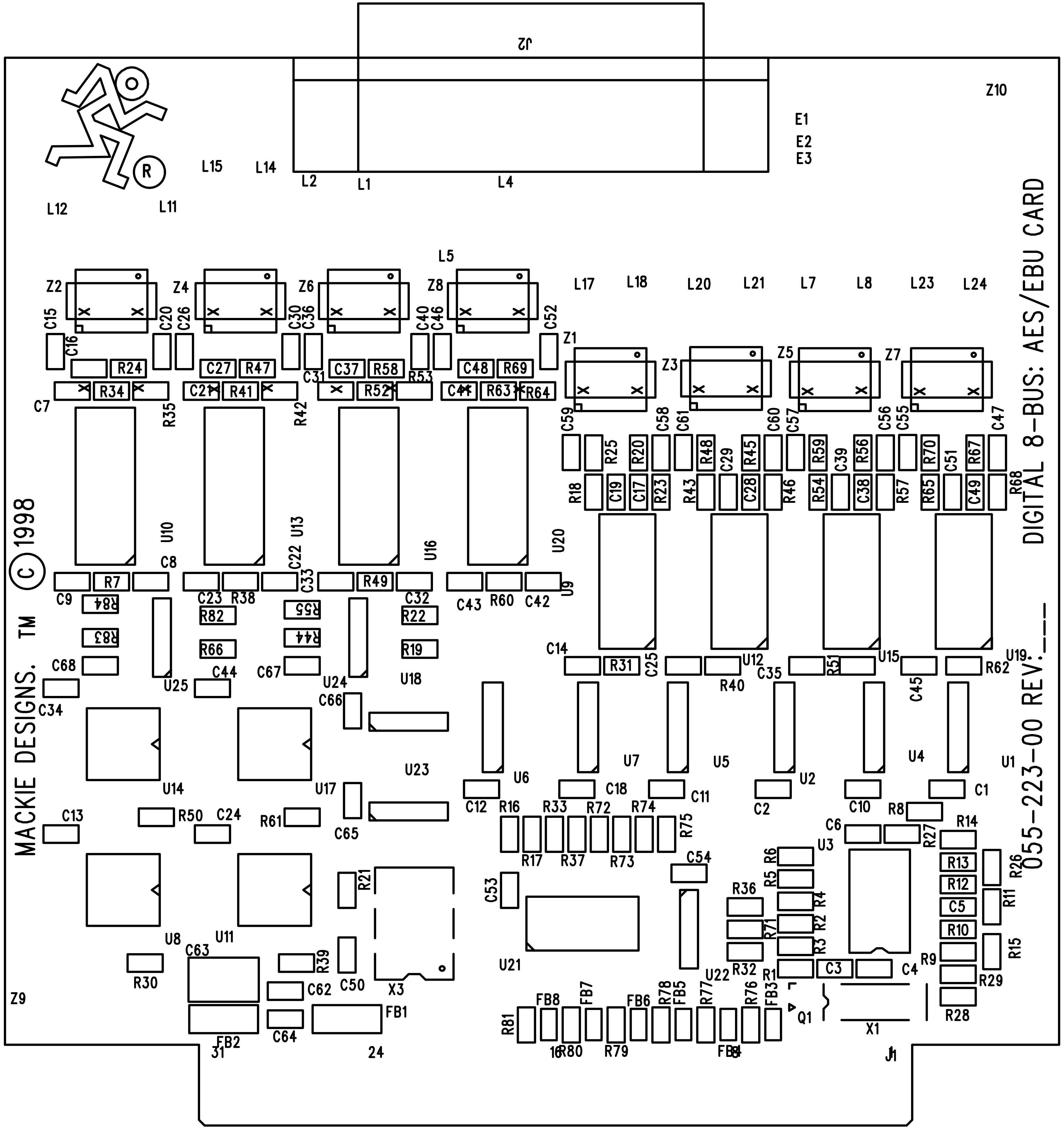
J2
Z10
E1
E2
E3
L15
L14
L2
L1
L4
L12
L11
L5
Z2
Z4
Z6
Z8
L17
L18
L20
L21
L7
L8
L23
L24
C15
C16
C20
C26
C30
C36
C40
C46
C52
Z1
Z3
Z5
Z7
R24
C27
R47
C37
R58
C48
R69
R34
R35
C21
R41
R42
C31
R52
R53
C41
R63
R64
C7
C59
R25
R20
C58
C61
R48
C29
R45
C60
C57
R59
C39
R56
C56
C55
R70
C51
R67
C47
R18
C19
C17
R23
R43
C28
R46
R54
C38
R57
R65
C49
R68
U10
U13
U16
U20
C8
C22
C33
U9
R7
R49
C9
C23
R38
C32
C43
R60
C42
R84
R82
R55
R22
R83
R44
R66
R19
C14
R31
C25
U12
R40
C35
R51
U15
C45
R62
U19
C68
C44
C67
U24
U18
U25
C34
C66
U23
U7
U5
U2
U4
U1
U14
U17
U6
C12
R16
R33
C18
R72
R74
C11
C2
C10
R8
C1
C13
R50
C24
R61
C65
R75
C6
U3
R27
R14
R17
R37
R73
C54
R6
R5
R13
R26
R36
R4
R12
R11
C53
R2
C5
R71
R3
R10
R15
R21
U8
U11
R39
U21
R32
R9
C63
R30
C62
C50
X3
U22
R1
C3
C4
R29
Z9
FB8
FB7
FB6
FB5
R78
R77
R76
FB3
Q1
X1
R28
FB1
R81
16
R80
R79
FB4
J1
C64
FB2
31
24
MACKIE DESIGNS. TM
© 1998
DIGITAL 8-BUS: AES/EBU CARD
055-223-00 REV.___

HDR HOME

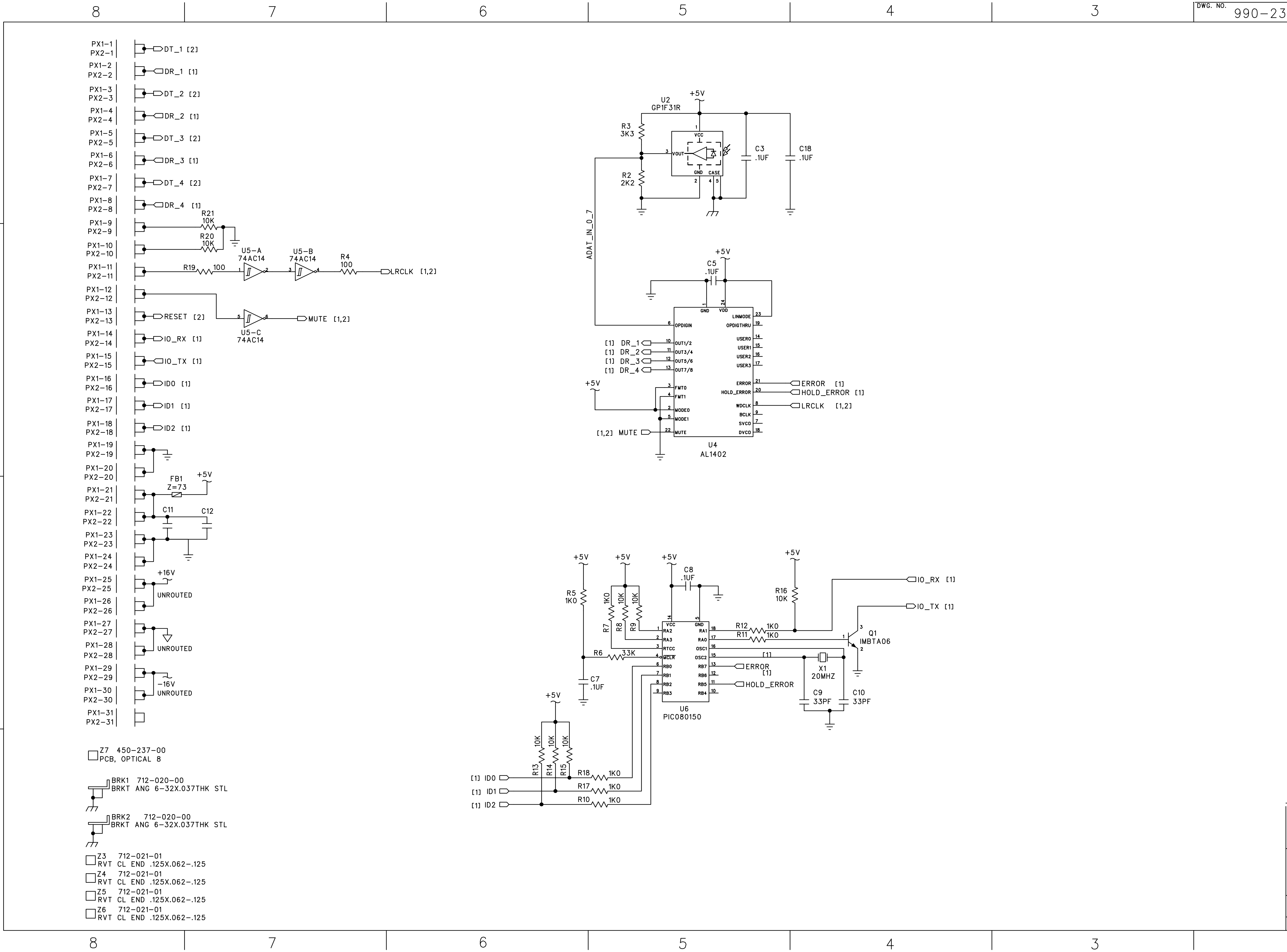
PX1-1 PX2-1 DT_1 [2]
PX1-2 PX2-2 DR_1 [1]
PX1-3 PX2-3 DT_2 [2]
PX1-4 PX2-4 DR_2 [1]
PX1-5 PX2-5 DT_3 [2]
PX1-6 PX2-6 DR_3 [1]
PX1-7 PX2-7 DT_4 [2]
PX1-8 PX2-8 DR_4 [1]
PX1-9 PX2-9
R21 10K
R20 10K
PX1-10 PX2-10
U5-A 74AC14
U5-B 74AC14
R4 100
PX1-11 PX2-11
R19 100
LRCLK [1,2]
PX1-12 PX2-12
PX1-13 PX2-13 RESET [2]
MUTE [1,2]
U5-C 74AC14
PX1-14 PX2-14 IO_RX [1]
PX1-15 PX2-15 IO_TX [1]
PX1-16 PX2-16 ID0 [1]
PX1-17 PX2-17 ID1 [1]
PX1-18 PX2-18 ID2 [1]
PX1-19 PX2-19
PX1-20 PX2-20
FB1 Z=73
+5V
PX1-21 PX2-21
C11
C12
PX1-22 PX2-22
PX1-23 PX2-23
PX1-24 PX2-24
+16V
PX1-25 PX2-25
UNROUTED
PX1-26 PX2-26
PX1-27 PX2-27
UNROUTED
PX1-28 PX2-28
PX1-29 PX2-29
-16V
UNROUTED
PX1-30 PX2-30
PX1-31 PX2-31
Z7 450-237-00 PCB, OPTICAL 8
BRK1 712-020-00 BRKT ANG 6-32X.037THK STL
BRK2 712-020-00 BRKT ANG 6-32X.037THK STL
Z3 712-021-01 RVT CL END .125X.062-.125
Z4 712-021-01 RVT CL END .125X.062-.125
Z5 712-021-01 RVT CL END .125X.062-.125
Z6 712-021-01 RVT CL END .125X.062-.125
U2 GP1F31R
+5V
R3 3K3
VCC
VOUT
GND
CASE
R2 2K2
C3 .1UF
C18 .1UF
ADAT_IN_0_7
+5V
C5 .1UF
GND
VDD
LINMODE
OPDIGIN
OPDIGTHRU
USER0
USER1
USER2
USER3
[1] DR_1 OUT1/2
[1] DR_2 OUT3/4
[1] DR_3 OUT5/6
[1] DR_4 OUT7/8
+5V
FMT0
FMT1
MODE0
MODE1
[1,2] MUTE MUTE
ERROR ERROR [1]
HOLD_ERROR HOLD_ERROR [1]
WDCLK LRCLK [1,2]
BCLK
SVCO
DVCO
U4 AL1402
+5V
+5V
+5V
C8 .1UF
+5V
R16 10K
IO_RX [1]
IO_TX [1]
R5 1K0
R7 1K0
R8 10K
R9 10K
VCC
GND
RA2
RA3
RTCC
MCLR
RB0
RB1
RB2
RB3
RA1
RA0
OSC1
OSC2
RB7
RB6
RB5
RB4
R12 1K0
R11 1K0
Q1 IMBTA06
R6 33K
[1]
ERROR [1]
HOLD_ERROR
X1 20MHZ
C9 33PF
C10 33PF
C7 .1UF
U6 PIC080150
+5V
R13 10K
R14 10K
R15 10K
R18 1K0
R17 1K0
R10 1K0
[1] ID0
[1] ID1
[1] ID2

MACKIE.
Mackie Designs Inc. Woodinville, Wa.

SCHEMATIC, OPTICAL 8

SIZE	SCALE:	DWG. NO.	REV.
D	NONE	990-237-00	B

DWG FILE: SHEET 1 OF 2

HDR HOME

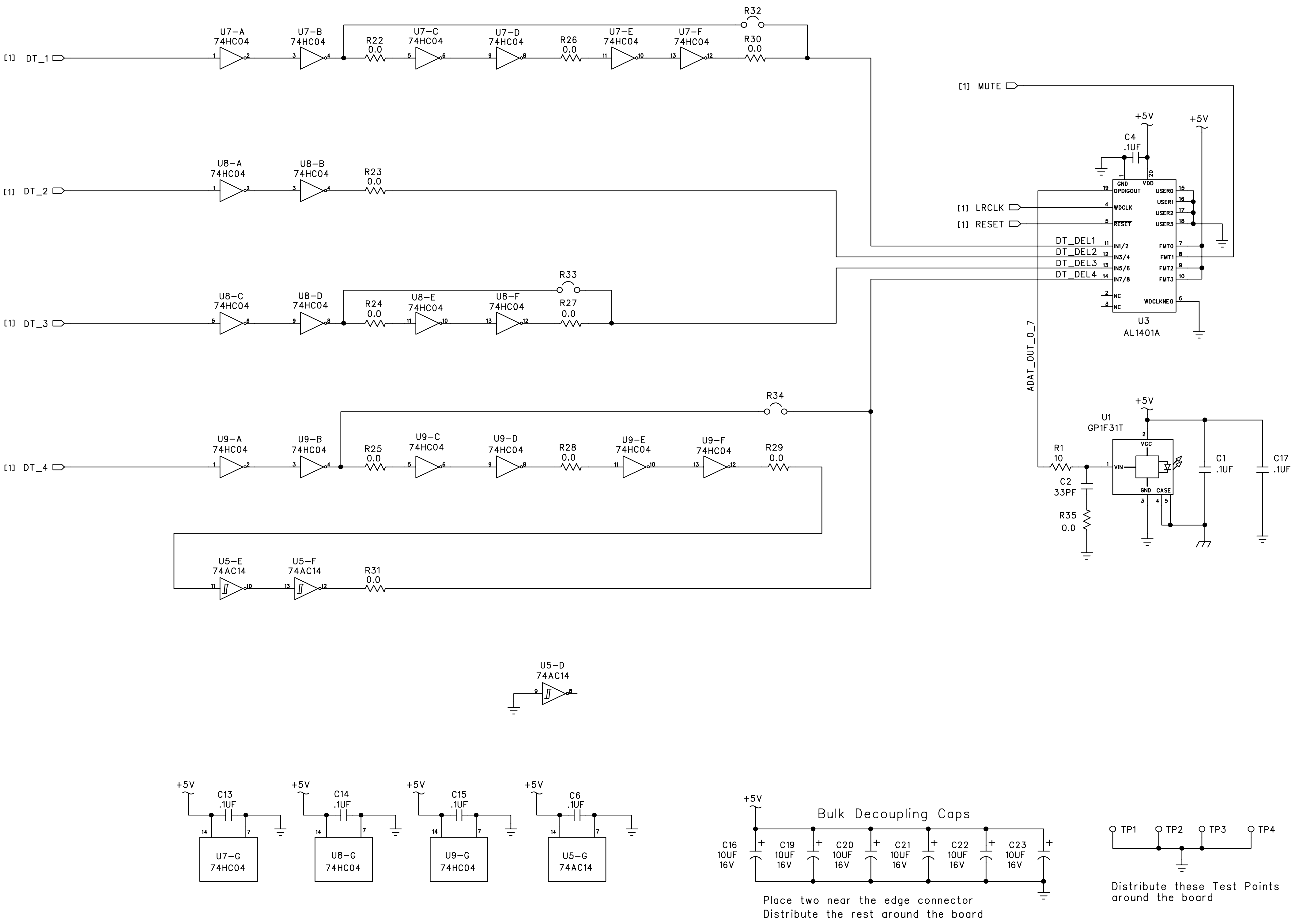
[1] DT_1
U7-A 74HC04
U7-B 74HC04
R22 0.0
U7-C 74HC04
U7-D 74HC04
R26 0.0
U7-E 74HC04
U7-F 74HC04
R32
R30 0.0
[1] DT_2
U8-A 74HC04
U8-B 74HC04
R23 0.0
[1] DT_3
U8-C 74HC04
U8-D 74HC04
R24 0.0
U8-E 74HC04
U8-F 74HC04
R33
R27 0.0
R34
[1] DT_4
U9-A 74HC04
U9-B 74HC04
R25 0.0
U9-C 74HC04
U9-D 74HC04
R28 0.0
U9-E 74HC04
U9-F 74HC04
R29 0.0
U5-E 74AC14
U5-F 74AC14
R31 0.0
U5-D 74AC14
[1] MUTE
+5V
C4 .1UF
GND
VDD
OPDIGOUT
USER0
USER1
USER2
USER3
[1] LRCLK
WDCLK
[1] RESET
RESET
DT_DEL1
DT_DEL2
DT_DEL3
DT_DEL4
IN1/2
IN3/4
IN5/6
IN7/8
FMT0
FMT1
FMT2
FMT3
NC
NC
WDCLKNEG
U3 AL1401A
ADAT_OUT_0_7
U1 GP1F31T
VCC
VIN
CASE
R1 10
C2 33PF
R35 0.0
C1 .1UF
C17 .1UF
C13 .1UF
U7-G 74HC04
C14 .1UF
U8-G 74HC04
C15 .1UF
U9-G 74HC04
C6 .1UF
U5-G 74AC14
C16 10UF 16V
C19 10UF 16V
C20 10UF 16V
C21 10UF 16V
C22 10UF 16V
C23 10UF 16V
TP1
TP2
TP3
TP4

Bulk Decoupling Caps

Place two near the edge connector
Distribute the rest around the board

Distribute these Test Points
around the board

Mackie Designs Inc. Woodinville, Wa.

SCHEMATIC, OPTICAL 8

SIZE D SCALE: NONE DWG. NO. 990-237-00 REV. B
DWG FILE: SHEET 2 OF 2

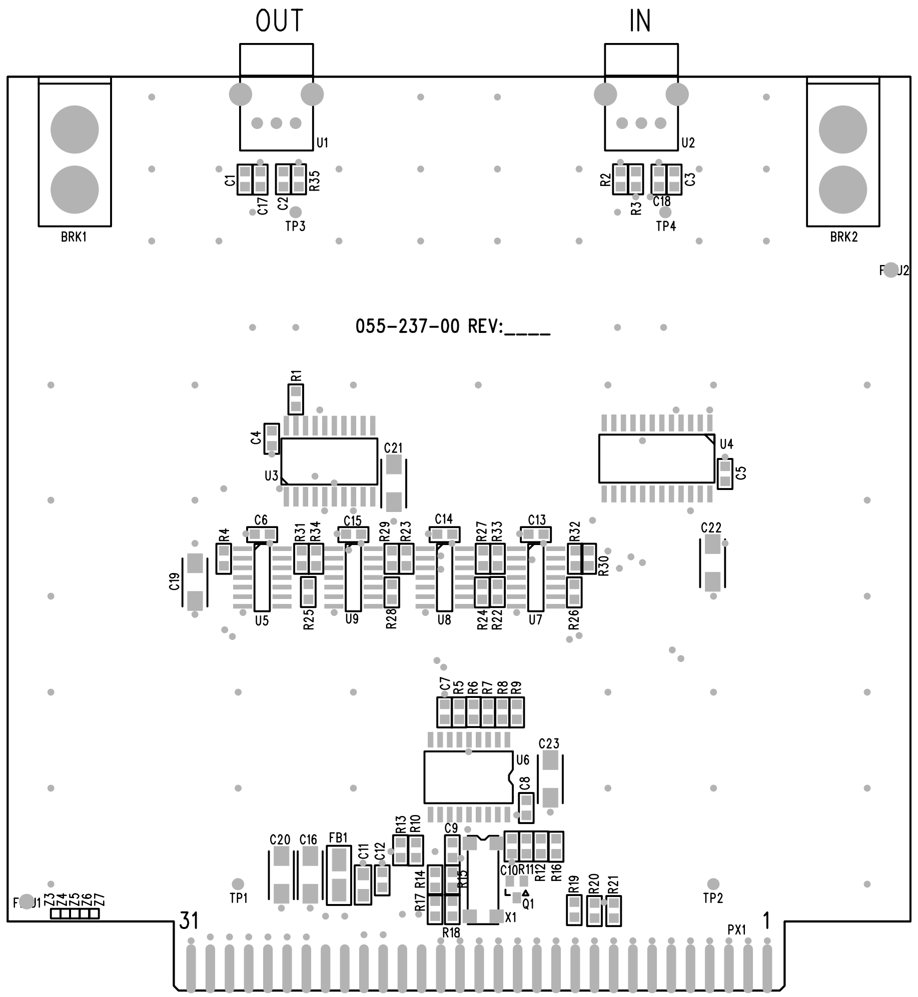
OUT
IN
U1
U2
C1
C17
C2
R35
TP3
R2
R3
C18
C3
TP4
BRK1
BRK2
J2
055-237-00 REV:____
R1
C4
C21
U3
U4
C5
C22
C19
R4
C6
R31
R34
C15
R29
R23
C14
R27
R33
C13
R32
R30
U5
R25
U9
R28
U8
R24
R22
U7
R26
C7
R5
R6
R7
R8
R9
C23
U6
C8
C9
R13
R10
C20
C16
FB1
C11
C12
R17
R14
R18
C10
R11
R12
R16
Q1
X1
R19
R20
R21
TP1
TP2
PX1
31
1
J1

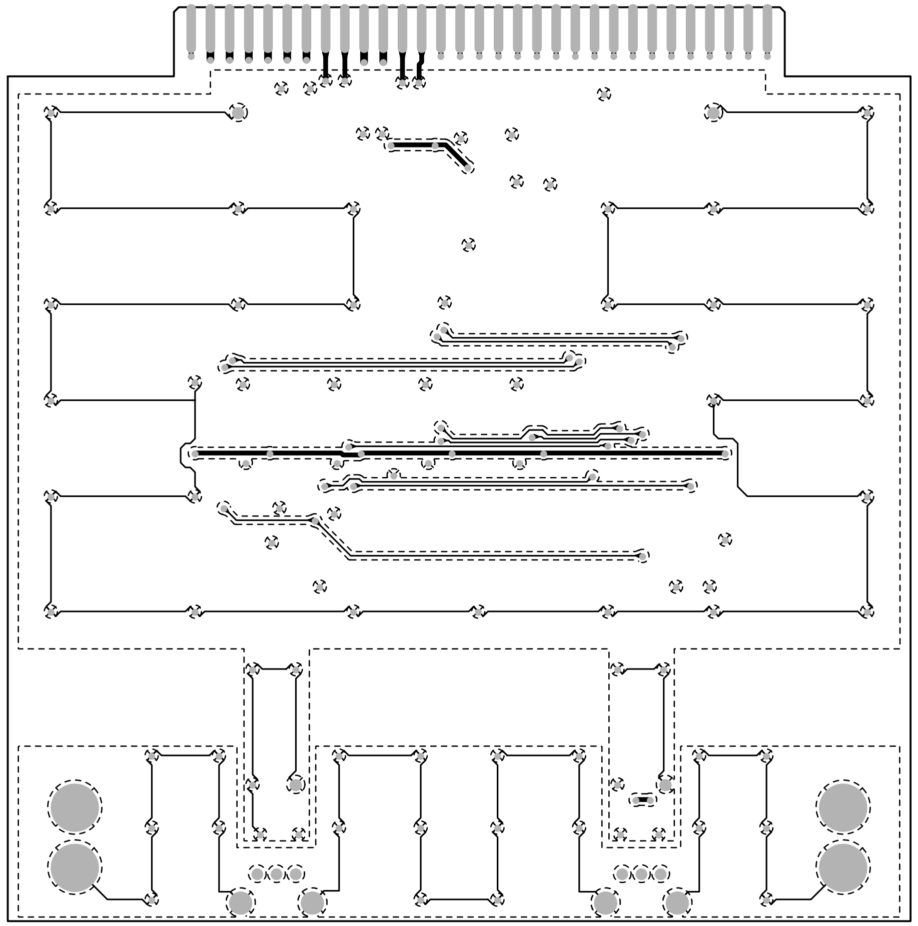

Bottom Surface

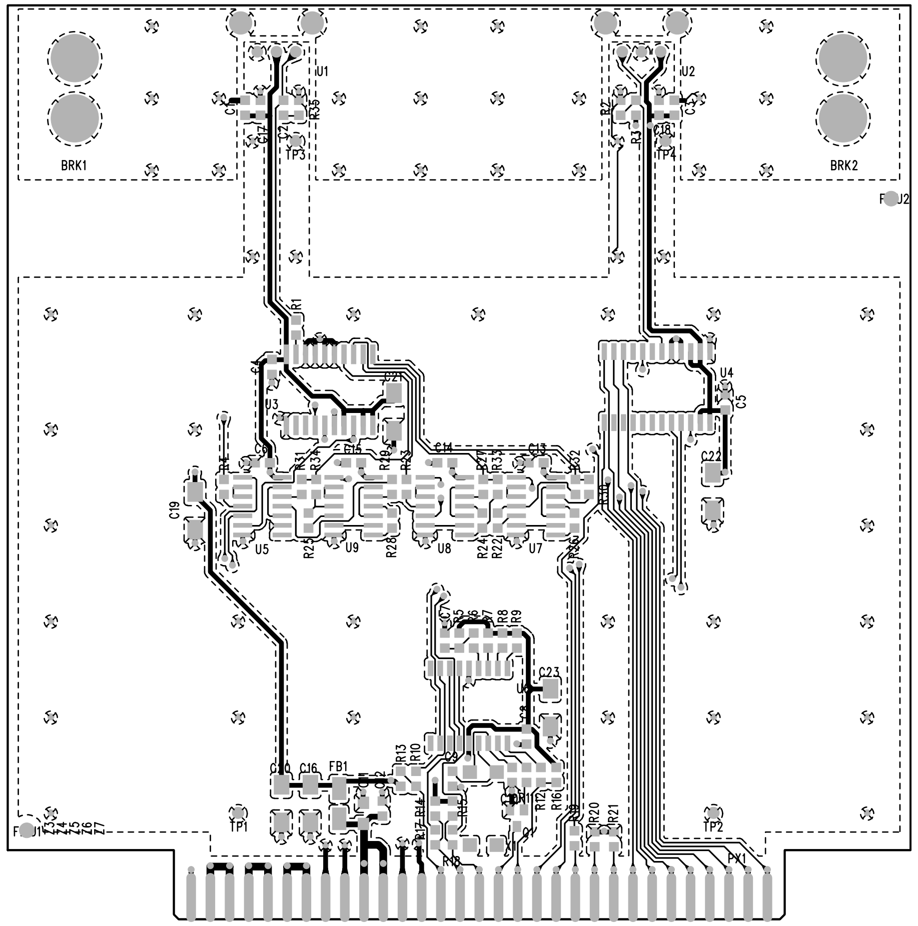

Top Surface