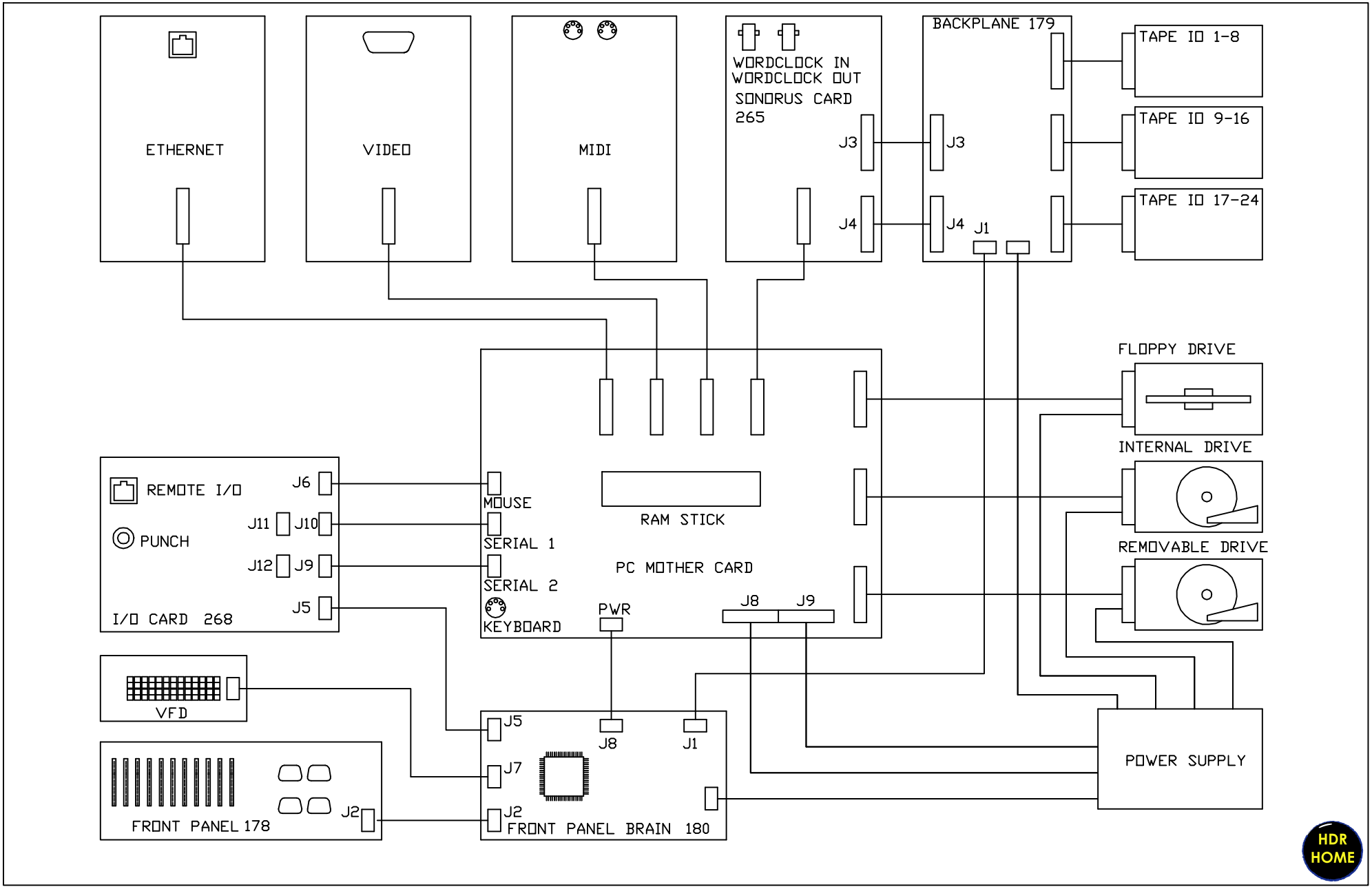
ETHERNET
VIDEO
MIDI
WORDCLOCK IN
WORDCLOCK OUT
SONORUS CARD
265
J3
J4
BACKPLANE 179
J3
J4
J1
TAPE IO 1-8
TAPE IO 9-16
TAPE IO 17-24
FLOPPY DRIVE
INTERNAL DRIVE
REMOVABLE DRIVE
REMOTE I/O
PUNCH
J6
J11
J10
J12
J9
J5
I/O CARD 268
MOUSE
SERIAL 1
SERIAL 2
KEYBOARD
RAM STICK
PC MOTHER CARD
PWR
J8
J9
VFD
J5
J7
J2
FRONT PANEL 178
J5
J8
J1
J2
FRONT PANEL BRAIN 180
POWER SUPPLY
HDR
HOME